رهاب صنعت سپاهان
Rahab sanat sepahanco

AEG

TECHNICAL CATALOGUE 2012

HIGH EFFICIENCY MOTORS
PREMIUM EFFICIENCY MOTORS

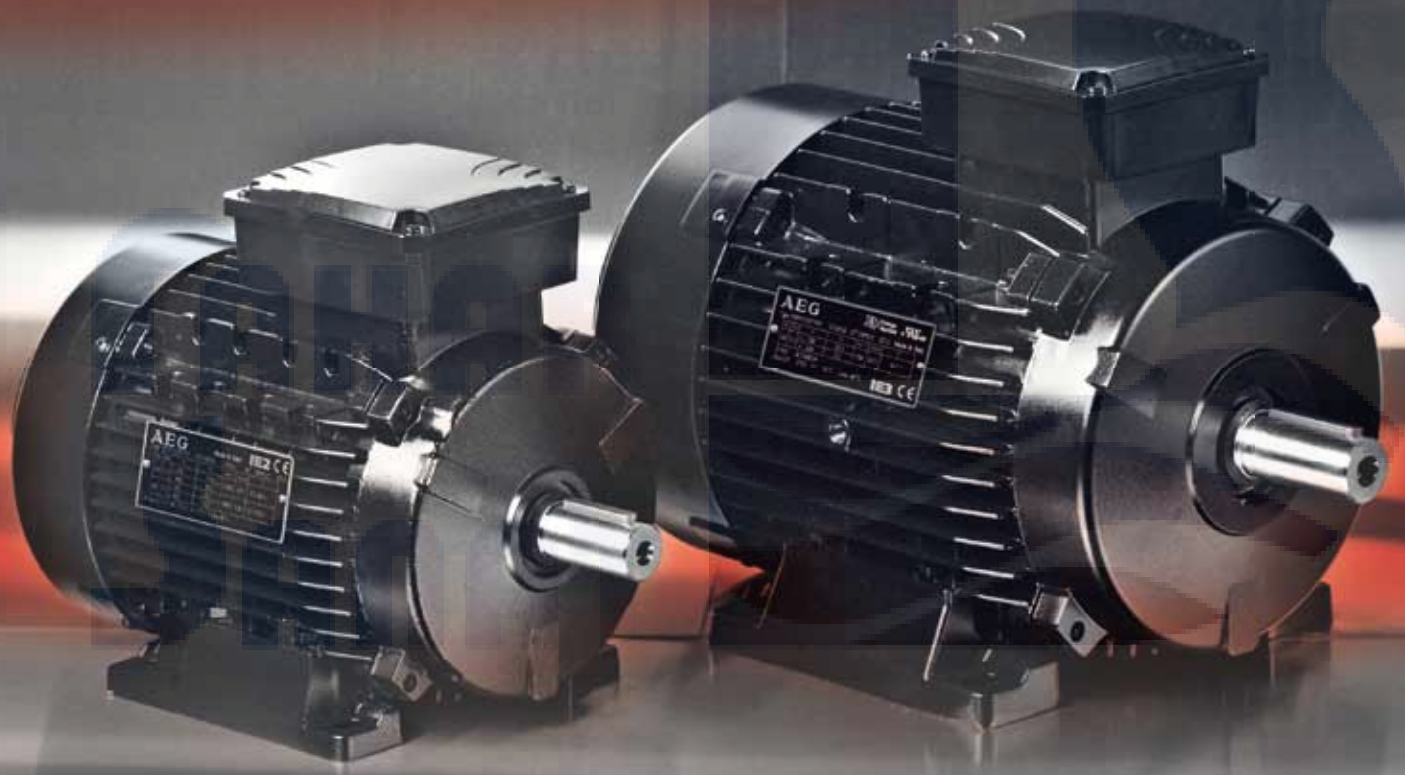

IE2 IE3 ENERGY Energy Verified

CONTENTS

GENERAL INFORMATION 3
PRODUCT RANGE 4
STANDARDS AND REGULATIONS 10
CONDITION OF INSTALLATION 14
TOLERANCES 15
MECHANICAL DESIGN 16
- Degrees of protection
- Mounting arrangements
- Materials and painting
- Bearings
- Optional features
- Cooling, vibration and noise

ELECTRICAL DESIGN 25
- Rated voltage, frequency and current
- Insulation and temperature rise
- Starting rate
- Thermal protection
- Connection
- Encoder

ORDER DATA 31

THREE-PHASE MOTORS 33
TERMINAL BOX 34
CONNECTION DIAGRAMS 36
FREQUENCY CONVERTER 38
SPARE PARTS 39
TYPE DESIGNATION 40
PERFORMANCE DATA 41
- Premium efficiency motors – IE3
- High efficiency motors – IE2
- Standard efficiency motors – IE1
- Two speed motors

DIMENSIONS 57

GENERAL INFORMATION

MISSION

For 50 years the Lafert Group have been committing to continuous growth by being the global leading manufacturer of **Customised Engineered Electric Motors and Drives** with special focus on **Industrial Automation**, **Energy Saving** and **Renewables.**

The Group have developed an excellent ability to adapt the highest quality standards to any specific market demands providing solutions for several applications and OEM requests.

The Lafert Group's range of products is divided in 5 product sectors:

ENERGY EFFICIENT Motors, three-phase motors high efficiency, IE2 and premium efficiency, IE3

ENERGY EFFICIENT Motors

CUSTOMISED Motors, single-phase, three-phase and brake motors in special execution

CUSTOMISED Motors

HIGH PERFORMANCE Motors, permanent magnet synchronous motors and generators as well as the relevant drives

HIGH PERFORMANCE Motors

SERVO Motors & Drives, brushless servomotors and drives for industrial automation

SERVO Motors & Drives

LIFT Motors, permanent magnet synchronous gearless machines for elevators

LIFT Motors

ENERGY EFFICIENT MOTORS

HIGH EFFICIENCY, ENERGY SAVING

The range of **Energy Efficient Motors** has been developed to meet the increasing demand for **increased energy efficiency and energy saving products** in Europe, North America and Australia after the introduction of directives imposing **higher minimum efficiency levels.**

IE2
IE3

High Efficiency and Premium Efficiency Three-phase Motors up to 200 kW meeting the requirements of IE2 and IE3 internationally efficiency levels in accordance with **IEC 60034-30;2008** and test method IEC 60034-2-1;2007.

ENERGY
C US

Motors conforming to the higher efficiency standards for the North American market in accordance with **EPAct Regulation** (Energy Policy Act, 1992) and **EISA Directive** (Energy Independence and Security Act, 2007).
In addition these motors are verified by **UL Underwriters Laboratories Inc**..

c UL Energy Verified

The range of Energy Efficient Motors from Lafert is the first complete range of IE2 and IE3 motors available to worldwide Industry.

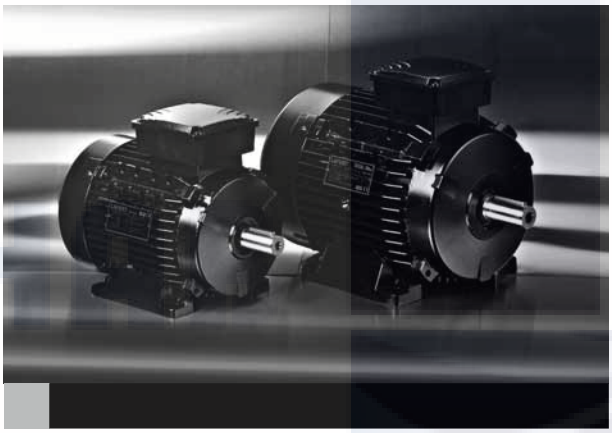

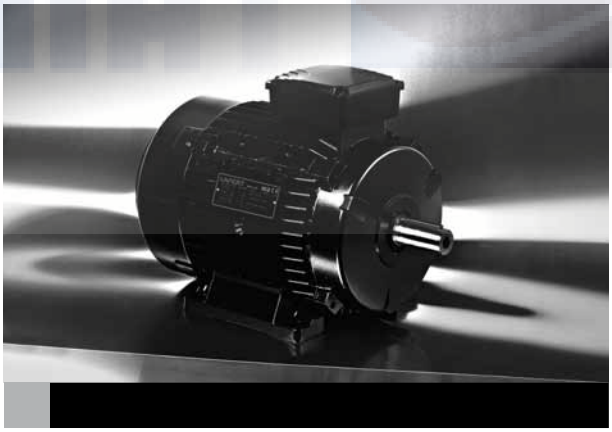

CUSTOMISED MOTORS

CUSTOMISATION, OUR CORE BUSINESS

A wide range of **Customised Motors** with **special execution**, in order to optimise electrical and mechanical design for particular markets or specific OEM requests.

Single-phase, Three-phase and Brake Motors manufactured ad hoc for non-standard applications according to **customer's demands**: customised flanges and shafts, special electrical design for each duty request, complete tailor-made design, AC or DC brake coil to fit any applications, solutions to special environmental conditions (Smoke and Heat Exhaust Ventilation, Dust Ignition for Zone 22, Non Sparking Exn).

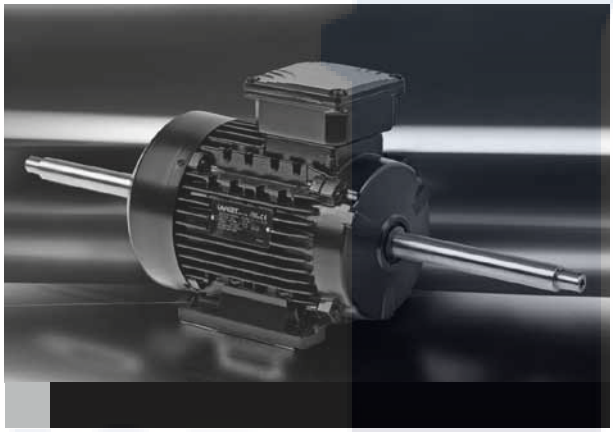

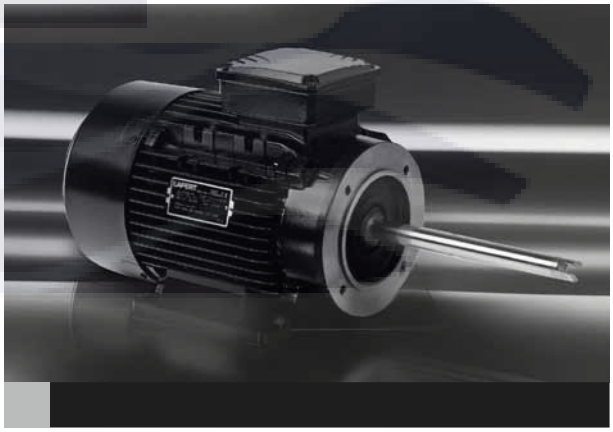

HIGH PERFORMANCE MOTORS

PERMANENT MAGNET SYNCHRONOUS MOTORS SIGNIFICANTLY REDUCE ENERGY COSTS

High Performance is a range of **PM synchronous motors** 0.37 kW to 22 kW, with variable speed and equipped with sensorless drives. By combining the technology of both brushless servo motors and AC motors, this range achieves the highest efficiency level **IE4 – Super Premium Efficiency** and is specifically designed for its energy saving potential and renewable energy applications.

Permanent magnet technology, very high efficiency, compact design, reduced weight, low operating temperature.

A separate catalogue is available.

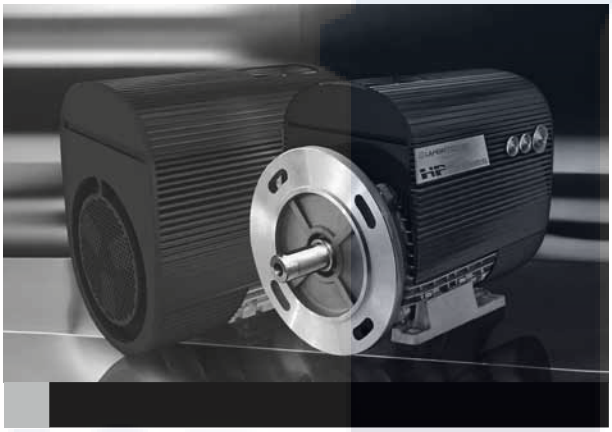

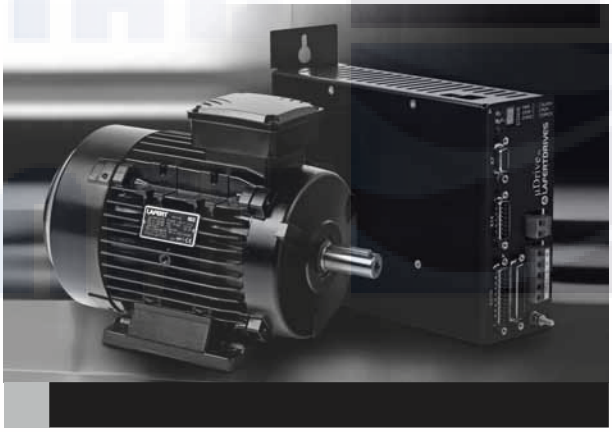

SERVO MOTORS & DRIVES

A MODERN AND COMPLETE RANGE FOR INDUSTRIAL AUTOMATION

The range of **Brushless Servo Motors** is one of the most complete available on the market, with nominal torques 0.20 Nm to 150 Nm. **Direct Drive Motors** cover torques 10 Nm to 500 Nm.
Thanks to its whole integrated manufacturing process, Lafert is one of the few independent manufacturers of servo motors and can supply a wide range of standard and tailor-made products for **Industrial Automation** giving **excellent flexibility** and high level of **cost efficiency.**

The family of **Servo Drives** is especially engineering for brushless servo motors and DC motors providing **particular versatility** and **adaptability** when designing automated industrial machines.
These products ensure high reliability and are subjected to strict tests in different loads and climatic conditions.

A separate catalogue is available.

LIFT MOTORS

GEARLESS MACHINES FOR ELEVATORS

The **Lift** range allows the manufacturing of systems where the traction machine is inside the elevator shaft, so there is no need for a machine room, with obvious **space and cost savings** and a more **rational layout** of the all components.

Permanent Magnet Gearless Synchronous Machines with compact design, reduced energy consumption, low noise level, high comfort and requiring less maintenance. Motors with torque up to 660 Nm for systems with a capacity load up to 1,275 kg, machines with TÜV SÜD Certifications, in compliance with the Specifications EN 81-1 and Lifts Directive 95/16/EC.

A separate catalogue is available.

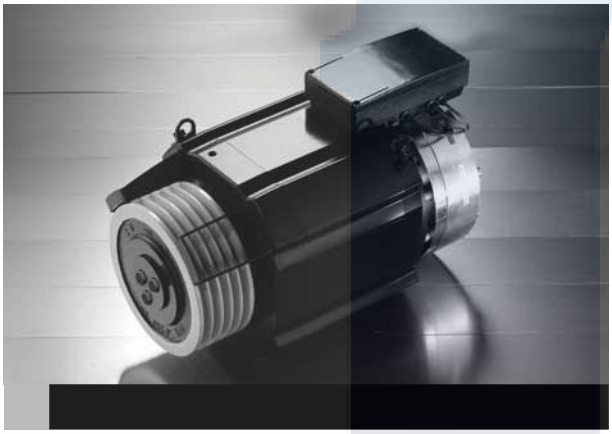

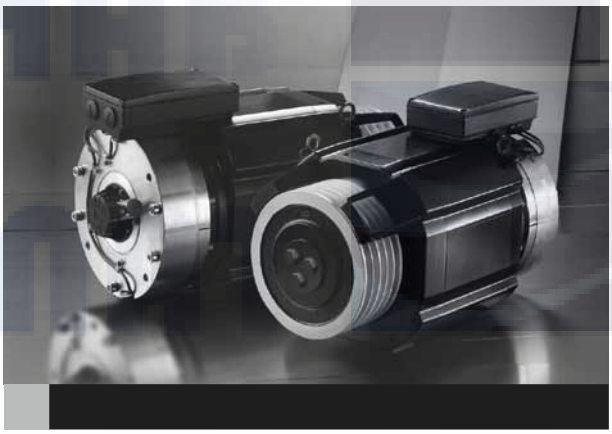

CERTIFICATO DEL SISTEMA
DI GESTIONE PER LA QUALITÀ
QUALITY MANAGEMENT SYSTEM CERTIFICATE

LAFERT S.p.A.

UNI EN ISO 9001:2008
ISO 9001:2008

Progettazione e produzione di motori elettrici asincroni monofase e trifase e autofrenanti
Design development and production of asynchronous three-phase and single-phase motors, brake motors

CERMET

QUALITY SYSTEM CERTIFICATE

The strictness of our quality control assures the flawless operation and reliability of our products. Our quality is confirmed by the **Certificate ISO 9001** awarded by CERMET, a certification body authorized by ACCREDIA.

SAFETY STANDARDS

Our motors comply with the requirements of the International Standard **IEC 60034** for rotating electrical machines as well as with the following European Directives: **Low Voltage Directive** (LV) 2006/95/EC, **Electromagnetic Compatibility Directive** (EMC) 2004/108/EC and **RoHS Directive** 2002/95/EC on the restriction of hazardous substances in electrical and electronic equipment.

All products comply with the requirements of the **Directive Machines** (MD) 2006/42/EC. In accordance with this Directive, induction motors are components and intended solely for integration into other machines. Commissioning is forbidden until conformity of the end-product with this Directive is proved.

The CE marking was applied for the first time in 1995.

When operating the motor, the observance of the Regulation EN 60204-1 and safety instructions indicated in our Operating Instructions must be complied with.

Motors complied with many other international standards are available on request:

Motors approved by UL Underwriters Laboratories Inc.

Motors approved by CSA

Motors approved by CQC (small motors up to 1.1 kW – AM, AMBY, AMF series)

EFFICIENCY STANDARDS

IE1 IE2 IE3

Efficiencies are harmonized to the **International Standard IEC 60034-30;2008** that states new efficiency levels: Standard Efficiency IE1, High Efficiency IE2 and Premium Efficiency IE3. The efficiency levels are in accordance with the testing method IEC 60034-2-1;2007.

High Efficiency motors according to **EPAct** legislation.
Verified by UL Underwriters Laboratories Inc.

Premium Efficiency motors according to **EISA** Directive.
Verified by UL Environment.

NEW INTERNATIONAL EFFICIENCY LEVELS FOR MOTORS: IE CODES

The International standard **IEC 60034-30;2008** states the new efficiency levels IE1, IE2 and IE3 for electric motors, ensuring an international common base for motor designing and classification, as well as for national legislative activities.

The efficiency measurement method for motors has also been reviewed.
The new standard **IEC 60034-2-1;2007** provides for test conditions and efficiency measurement methods which are more accurate and replaces the previous standard EN 60034-2;1996.

The efficiency levels provided for by the standard for single speed, three-phase – brake motors included -50 Hz or 50/60 Hz, motors with rated output between 0,75 kW and 375 kW, 2, 4 or 6 poles, on the basis of continuous duty operation S1 or intermittent periodic duty operation S3 are the following:

- **IE1 = Standard Efficiency**
- **IE2 = High Efficiency**
- **IE3 = Premium Efficiency**

However, IEC 60034-30 states only the requirements for the efficiency levels, thus creating shared measures worldwide. It does not state the motors to be supplied or the minimum efficiency level. This depends on any regional laws that are applicable.

EUROPE – ECODESIGN EUP DIRECTIVE (2005/32/EC)

The **EcoDesign EuP directive** (2005/32/CE) states the ecodesign requirements for energy-using products.
It is the **Commission Regulation (EC) 640/2009** that specifies the efficiency requirements for electric motors and that introduces in all countries of the European Community the obligation of the **IE2 minimum efficiency level as from 16th June 2011.**
At further dates, progressively higher minimum efficiency requirements will be established. The IE3 level will come in from 2015-2017.

The scope of the Commission Regulation includes single speed, three-phase 50 Hz or 50/60 Hz, squirrel cage asynchronous motors with rated output between 0.75 kW and 375 kW, 2, 4 or 6 poles, on the basis of continuous duty operation S1.

Motors to be exclusively exported out of the EU (machine distributors or manufacturers) may be produced and distributed with IE1 efficiency level even after 16th June 2011.
To that end, a statement will have to be made to the manufacturer.

UNITED STATES, CANADA – EISA ENERGY INDEPENDENCE AND SECURITY ACT, 2007

The **Energy Independence and Security Act, 2007 (EISA)** imposes in the USA and Canada Nema Premium Efficiency (IE3) as minimum level of efficiency as from 19th December 2010.

EISA, which replaces the current 1992 Energy Policy Act (EPAct) legislation, sets out new efficiency restrictive limits for a wide range of three-phase motors, including brake motors with power ratings from 1 to 500 HP.

STANDARDS AND REGULATIONS

EFFICIENCY VALUES FOR 50 HZ ACCORDING TO IEC 60034-30;2008

Efficiency standard calculation: IEC 60034-2-1;2007

Output	Standard Efficiency - IE1			High Efficiency - IE2			Premium Efficiency - IE3		
kW	2 poles	4 poles	6 poles	2 poles	4 poles	6 poles	2 poles	4 poles	6 poles
0.75	72.1	72.1	70.0	77.4	79.6	75.9	80.7	82.5	78.9
1.1	75.0	75.0	72.9	79.6	81.4	78.1	82.7	84.1	81.0
1.5	77.2	77.2	75.2	81.3	82.8	79.8	84.2	85.3	82.5
2.2	79.7	79.7	77.7	83.2	84.3	81.8	85.9	86.7	84.3
3	81.5	81.5	79.7	84.6	85.5	83.3	87.1	87.7	85.6
4	83.1	83.1	81.4	85.8	86.6	84.6	88.1	88.6	86.8
5.5	84.7	84.7	83.1	87.0	87.7	86.0	89.2	89.6	88.0
7.5	86.0	86.0	84.7	88.1	88.7	87.2	90.1	90.4	89.1
11	87.6	87.6	86.4	89.4	89.8	88.7	91.2	91.4	90.3
15	88.7	88.7	87.7	90.3	90.6	89.7	91.9	92.1	91.2
18.5	89.3	89.3	88.6	90.9	91.2	90.4	92.4	92.6	91.7
22	89.9	89.9	89.2	91.3	91.6	90.9	92.7	93.0	92.2
30	90.7	90.7	90.2	92.0	92.3	91.7	93.3	93.6	92.9
37	91.2	91.2	90.8	92.5	92.7	92.2	93.7	93.9	93.3
45	91.7	91.7	91.4	92.9	93.1	92.7	94.0	94.2	93.7
55	92.1	92.1	91.9	93.2	93.5	93.1	94.3	94.6	94.1
75	92.7	92.7	92.6	93.8	94.0	93.7	94.7	95.0	94.6
90	93.0	93.0	92.9	94.1	94.2	94.0	95.0	95.2	94.9
110	93.3	93.3	93.3	94.3	94.5	94.3	95.2	95.4	95.1
132	93.5	93.5	93.5	94.6	94.7	94.6	95.4	95.6	95.4
160	93.7	93.8	93.8	94.8	94.9	94.8	95.6	95.8	95.6
200-375	94.0	94.0	94.0	95.0	95.1	95.0	95.8	96.0	95.8

EFFICIENCY VALUES FOR 60 HZ ACCORDING TO IEC 60034-30;2008

Efficiency standard calculation: IEC 60034-2-1;2007

Output	Standard Efficiency - IE1			High Efficiency - IE2			Premium Efficiency - IE3		
kW	2 poles	4 poles	6 poles	2 poles	4 poles	6 poles	2 poles	4 poles	6 poles
0.75	77.0	78.0	73.0	75.5	82.5	80.0	77.0	85.5	82.5
1.1	78.5	79.0	75.0	82.5	84.0	85.5	84.0	86.5	87.5
1.5	81.0	81.5	77.8	84.0	84.0	86.5	85.5	86.5	88.5
2.2	81.5	83.0	78.5	85.5	87.5	87.5	86.5	89.5	89.5
3.7	84.5	85.0	83.5	87.5	87.5	87.5	88.5	89.5	89.5
5.5	86.0	87.0	85.0	88.5	89.5	89.5	89.5	91.7	91.0
7.5	87.5	87.5	86.0	89.5	89.5	89.5	90.2	91.7	91.0
11	87.5	88.5	89.0	90.2	91.0	90.2	91.0	92.4	91.7
15	88.5	89.5	89.5	90.2	91.0	90.2	91.0	93.0	91.7
18.5	89.5	90.5	90.2	91.0	92.4	91.7	91.7	93.6	93.0
22	89.5	91.0	91.0	91.0	92.4	91.7	91.7	93.6	93.0
30	90.2	91.7	91.7	91.7	93.0	93.0	92.4	94.1	94.1
37	91.5	92.4	91.7	92.4	93.0	93.0	93.0	94.5	94.1
45	91.7	93.0	91.7	93.0	93.6	93.6	93.6	95.0	94.5
55	92.4	93.0	92.1	93.0	94.1	93.6	93.6	95.4	94.5
75	93.0	93.2	93.0	93.6	94.5	94.1	94.1	95.4	95.0
90	93.0	93.2	93.0	94.5	94.5	94.1	95.0	95.4	95.0
110	93.0	93.5	94.1	94.5	95.0	95.0	95.0	95.8	95.8
150	94.1	94.5	94.1	95.0	95.0	95.0	95.4	96.2	95.8
185-375	94.1	94.5	94.1	95.4	95.4	95.0	95.8	96.2	95.8

GLOBALLY MINIMUM EFFICIENCY STANDARDS

Country	Product range	Law / Regulation	Minimum efficiency level	Next steps
EUROPE	400 V ± 10%; 50 Hz 0.75 - 375 kW - 2-6 poles	EC 640/2009	IE2 compulsory 16.06.2011	01.01.2015 - IE3 from 7.5 to 375 kW or IE2 motor with frequency converter 01.01.2017 - IE3 from 0.75 to 375 kW or IE2 motor with frequency converter
RUSSIA	up to 690 V ± 10%; 50 Hz 1 - 400 kW - All poles	GOST R 51677-2000	-	
SWITZERLAND	400 V ± 10%; 50 Hz 0.75 - 375 kW - 2-6 poles	EnV	IE2 compulsory 01.07.2011	For extension of regulations in 2015 and 2017, Swiss Energy Act will be revised in time
TURKEY	400 V ± 10%; 50 Hz 0.75 - 375 kW - 2-6 poles	EC 640/2009	IE1	No decision yet. Will follow probably the EU timeline state initiative and customer awareness for IE2
USA	460 V ± 10%; 60 Hz 1 - 200 HP - 2-6 poles	Nema EPAct EISA 2007	IE3 compulsory 19.12.2010	
CANADA	460 V/575 V ± 10%; 60 Hz 1 - 200 HP - 2-6 poles	CSA C390	IE3 compulsory 01.01.2011	
MEXICO	460 V ± 10%; 60 Hz 1 - 200 HP - 2-6 poles	Nema EPAct EISA 2007	IE3 compulsory 01.01.2011	Will follow USA model
BRAZIL	220/380/440/460/480 V ± 10%; 60 Hz 0.75 - 250 kW - 2-8 poles	NBR 17094-1 Regulation 553	IE2 compulsory 08.12.2009	
CHILE	380/400/420/440/460/690 V ± 10%; 50 Hz 0.75 Kw - 7.5 kW - 2-6 poles	NCH 3086	IE2 compulsory 04.01.2011	
CHINA	380 V ± 10%; 50 Hz 0.55 - 315 kW - 2-6 poles	GB 18613-2006	IE2 is planned	
HONG KONG	380 V ± 10%; 50 Hz 0.75 - 375 kW - 2-6 poles	Mandatary Buildings Energy Efficiency Bill	IE2 introduction stage since Dec 2009	01.01.2015 - IE3 from 7.5 to 375 kW or IE2 motor with frequency converter 01.01.2017 - IE3 from 0.75 to 375 kW or IE2 motor with frequency converter
INDIA	415 V/690 V ± 10%; 50 Hz 0.37 - 315 kW - 2-8 poles	IS:12615	IE2 compulsory 01.06.2011	IE3 from 01.01.2014
ISRAEL	400 V ± 10%; 50 Hz 0.75 - 185 kW - 2-8 poles	IS:5289	IE2 compulsory 01.02.2008	
JAPAN	200/220/400/440 V ± 10%; 50/60 Hz 0.2 - 160 kW - 2-6 poles	JIS C 4210 JIS C 4212	IE2 expected	No law, efficiency per JIS standards. IEC 60034-30 will be integrated into JIS in 2012
KOREA	up to 600 V ± 10%; 60 Hz 0.75 - 200 kW - 2-6 poles	KS C 4202	IE2 compulsory 01.01.2010	
SINGAPORE	415 V ± 10%; 50 Hz 1.1 - 90 kW - 2-4 poles	SS530:2006	IE2	Only government projects compulsory IE2
TAIWAN	< 600 V ± 10%; 60 Hz 0.37 - 200 kW - 2-8 poles	CNS14400	IE2	No plan to adapt IEC 60034-30. IE2 motors can be certified acc. to CNS 14400 as high efficiency motors
SAUDI ARABIA	380 V/ 460 V ± 5%; 60 Hz all kW - all poles	No regulation	-	
UNITED ARAB EMIRATES	400 V ± 10%; 50 Hz 0.75 - 375 kW - 2-6 poles	No regulation	IE1	No regional standards regarding a minimun efficiency
SOUTH AFRICA	400 V/525 V ± 10%;50 Hz 0.75 - 375 kW - 2-6 poles	IEC 60034-30	IE1	
AUSTRALIA NEW ZELAND	415 V/690 V ± 10%; 50 Hz 0.75 - 186 kW - 2-8 poles	AS/NZS 1359.5-2004	IE2 compulsory 01.04.2006	IE3 expected for near future

CONDITIONS OF INSTALLATION

The motors comply with the relevant standards and regulations, especially:

ELECTRICAL	Rating and performance	IEC 60034-1
	Methods for determining losses and efficiency using tests	IEC 60034-2
	Standard method for determing losses and efficiency from tests	IEC 60034-2-1
	Efficiency classes of single speed, three-phase, cage-induction motors (IE-code)	IEC 60034-30
	Terminal markings and direction of rotation	IEC 60034-8
	Starting performance	IEC 60034-12
	Standard voltages	IEC 60038
	Insulating materials	IEC 60085
MECHANICAL	Dimensions and output ratings	IEC 60072
	Mounting dimensions and relationship frame sizes-output ratings, IM B3, IM B5, IM B14	IEC 60072
	Cylindrical shaft ends for electric motors	IEC 60072
	Degrees of protection	IEC 60034-5
	Methods of cooling	IEC 60034-6
	Mounting arrangements	IEC 60034-7
	Noise limits	IEC 60034-9
	Mechanical vibration	IEC 60034-14
	Mounting flanges	DIN 42948
	Tolerances of mounting and shaft extensions	DIN 42955
	Classification of environmental conditions	IEC 60721-2-1
	Mechanical vibration; balancing	ISO 8821

The motors are designed for operation at **altitudes ≤ 1000 m** above sea-level and at **ambient temperatures of up to 40° C**. Exceptions are indicated on the rating plate. The motors conform to **degree of protection IP 55** to IEC 60034-5. Higher protection on request.

The standard design for horizontal mounting is suitable for indoor and protected outdoor installation, climate group **moderate** (see page 18) (temperature of coolant -20° to +40° C). For unprotected outdoor installation or severe climatic conditions (moisture category wet, climate group **worldwide**, extremely dusty site conditions, aggressive industrial atmosphere, danger of storm rain and coastal climate, danger of attack by termites, etc.), as well as vertical mounting, special protective measures are recommended, such as:

- Protective cowl (for vertical shaft-down motors)
- For vertical shaft-up motors additional bearing seal and flange drainage
- Special paint finish
- Treatment of winding with protective moisture-proof varnish
- Anti-condensation heating (possibly winding heating)
- Condensation drain holes

The special measures to be applied have to be agreed with the factory once the conditions of installation have been settled.

The corresponding conditions of installation have to be clearly indicated in the order.

TOLERANCES

ELECTRICAL TOLERANCES

For industrial motors to **EN 60034-1**, certain tolerances must be allowed on guaranteed values, taking into consideration the necessary tolerances for the manufacture of such motors and the materials used. The standard includes the following remarks:

1- It is not intended that guarantees necessarily have to be given for all or any of the items involved. Quotations including guaranteed values subject to tolerances should say so, and the tolerances should be in accordance with the table.
2- Attention is drawn to the different interpretation of the term guarantee. In some countries a distinction is made between guaranteed values and typical or declared values.
3- Where a tolerance is stated in only one direction, the value is not limited in the other direction.

Values for	Tolerance
Efficiency (η) (by indirect determination)	- 0.15 (1 - η) at $P_N \leq 150$ kW - 0.1 (1 - η) at $P_N > 150$ kW
Power factor (cos φ)	$\frac{1 - \cos\varphi}{6}$, minimum 0.02, maximum 0.07
Slip (s) (at rated load and at working temperature)	± 20 % of the guaranteed slip at $P_N \geq 1$ kW ± 30 % of the guaranteed slip at $P_N < 1$ kW
Breakaway starting current (I_A) (in the starting circuit envisaged)	+ 20 % of the guaranteed starting current (no lower limit)
Breakaway torque (M_A)	- 15 % and + 25 % of the guaranteed breakaway torque (+ 25 % may be exceeded by agreement)
Pull-up torque (M_S)	- 15 % of the guaranteed value
Pull-out torque (M_K)	- 10 % of the guaranteed value (after allowing for this tolerance, M_K/M_N not less than 1.6)
Moment of inertia (J)	± 10 % of the guaranteed value

MECHANICAL TOLERANCES

According to **IEC 60072-1**, the following tolerances on mechanical dimensions of electric motors are permitted:

Parameter	Code	Tolerance	
Shaft height	H	- up to 250 - over 250	-0.5 mm -1 mm
Diameter of shaft end[1)]	D-DA	- from 11 to 28 mm - from 38 to 48 mm - from 55 to 100 mm	j6 k6 m6
Hub key width	F-FA		h9
Flange spigot	N	- up to 132 - over size 132	j6 h6

1) Centerings holes in shaft extension to DIN 332 part 2

DEGREES OF PROTECTION

Degrees of mechanical protection for machines are designated in accordance with **IEC 60034-5** by the letters **IP** and two characteristic numerals.

First numeral: Protection against contact and ingress of foreign bodies

IP	Description
0	No special protection
1	Protection against solid foreign bodies larger than 50 mm (Example: inadvertent contact with the hand)
2	Protection against solid foreign bodies larger than 12 mm (Example: inadvertent contact with the fingers)
3	Protection against solid foreign bodies larger than 2.5 mm (Example: Wires, tools)
4	Protection against solid foreign bodies larger than 1 mm (Example: Wires, bands)
5	Protection against dust (harmful deposits of dust)
6	Complete protection against dust

Second numeral:
Protection against ingress of water

IP	Description
0	No special protection
1	Protection against vertically falling water drops (condensation)
2	Protection against dropping water when inclined by up to 15°
3	Protection against waterspray at up to 60° from vertical
4	Protection against water splashed from any direction
5	Protection against water projected by a nozzle from any direction
6	Protection against heavy seas or water projected in powerful jets
7	Protection when submerged between 0.15 and 1 m.
8	Protection when continuously submerged in water at conditions agreed between the manufacturer and the user

MOUNTING ARRANGEMENTS

Mounting arrangements for rotating electrical machines are designated according to **IEC 60034-7**, *Code I* (in brackets Code II).

Foot mounting

IM B3 (IM 1001)

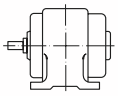

IM B6 (IM 1051)

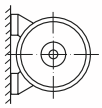

IM B7 (IM 1061)

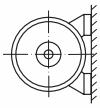

IM B8 (IM 1071)

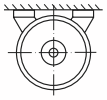

IM V5 (IM 1011)

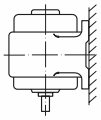

IM V6 (IM 1031)

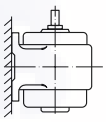

IM B34 (IM 2101)
Flange type C to DIN 42 948 at drive end

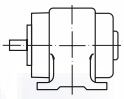

Flange mounting

IM B5 (IM 3001)
Flange type A to DIN 42 948 at drive end

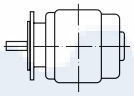

IM V1 (IM 3011)
Flange type A to DIN 42 948 at drive end

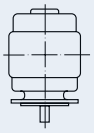

IM V3 (IM 3031)
Flange type A to DIN 42 948 at drive end

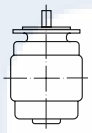

IM B35 (IM 2001)
Flange type A to DIN 42 948 at drive end

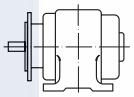

IM B14 (IM 3601)
Flange type C to DIN 42 948 at drive end

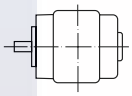

IM V18 (IM 3611)
Flange type C to DIN 42 948 at drive end

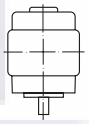

IM V19 (IM 3631)
Flange type C to DIN 42 948 at drive end

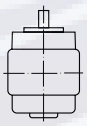

Motors without endshield

IM B9 (IM 9101)
without endshield and without ball bearings on drive end

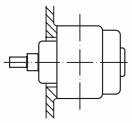

IM V8 (IM 9111)
without endshield and without ball bearings on drive end

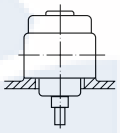

IM V9 (IM 9131)
without endshield and without ball bearings on drive end

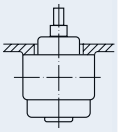

IM B15 (IM 1201)
without endshield and without ball bearings on drive end

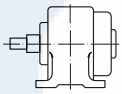

All standard motors can be installed according to the following mounting arrangements:

Frame Size	B3	B5	B35	Based on B5		Based on B3					Based on B35	
				V1	V3	V5	V6	B6	B7	B8	V15	V36
56-160	√	√	√	√	√	√	√	√	√	√	√	√
180-225	√	√	√	√	*	*	*	*	*	*	*	*
250-315	√	*	√	*	*	*	*	*	*	*	*	*

* for high loads refer to us

It is essential to state the desired mounting arrangement when ordering, as the constructive design depends partly on the mounting arrangement.

MATERIALS

Motor parts	Frame size	Material
Motor housing	56 - 160 180 - 315	Aluminium alloy Cast iron
Endshield	56 - 160 180 - 315	Aluminium alloy* Cast iron
Flanged endshield	56 - 160 180 - 315	Aluminium alloy* Cast iron
Fan cover	56 - 112 56 - 112 132 - 315	Plastics Sheet steel (optional) Sheet steel
Fan	56 - 315 56 - 160	Plastics Aluminium alloy (optional)
Terminal box	56 - 112 56 - 112 132 - 160 180 - 315	Plastics Aluminium alloy (optional) Aluminium alloy Cast iron

* Cast iron option for 112-132

PAINT FINISH

NORMAL FINISH

Suitable for climate group **Moderate** to IEC 60721-2-1, e.g. indoor and outdoor installation.
For short periods: up to 100% rel. humidity at temperatures up to +30° C.
Continuously: up to 85% rel. humidity at temperatures up to +25° C.
Standard paint color: RAL 9005.

SPECIAL FINISH K1

Suitable for climate group **Worldwide** to IEC 60721-2-1, e.g. outdoor installation in corrosive chemical and marine atmospheres.
For short periods: up to 100% rel. humidity at temperatures up to +35° C.
Continuously: up to 98% rel. humidity at temperatures up to +30° C.

BEARINGS

CLASSIFICATION OF BEARINGS (STANDARD DESIGN) [1)]

Bearings for standard design have permanent lubrication. Ball bearings to ISO15 (DIN 625).

Frame size	Poles	DE - NDE	Dimension
56	2 + 4	6201-2Z	12x32x10
63	2 + 4	6202-2Z	15x35x11
71	2 - 8	6203-2Z	17x40x12
80	2 - 8	6204-2Z C3	20x47x14
90	2 - 8	6205-2Z C3	25x52x15
100	2 - 8	6206-2Z C3	30x62x16
112	2 - 8	6306-2Z C3	30x72x19
132	2 - 8	6208-2Z C3	40x80x18
160	2 - 8	6309-2Z C3	45x100x25
180	2 - 8	6311 C3	55x120x29
200	2 - 8	6312 C3	60x130x31
225	2 - 8	6313 C3	65x140x33
250	2 - 8	6314 C3	70x150x35
280	2 - 8	6316 C3	80x170x39
315	2	6317 C3	85x180x41
315	4 - 8	NU319 C3 - 6319 C3	95x200x45

1) With regard on bearings for special design, consult us

LUBRICATION

Permanent lubrication up to 160 frame
180 frame up with regreasing facility lubrication nipple is a flat M10x1 to DIN 3404

ROLLER BEARINGS

Roller bearings available as an option. Please consult us.

BEARING ARRANGEMENT

Frame size	Bearing DE	Bearing NDE	Spring-loaded
56 - 160 Standard motors	Non-locating bearing	Non-locating bearing	Non-drive end
63 - 160 Brake motors	Non-locating bearing	Locating bearing	Drive end
180 - 315 Standard motors	Locating bearing	Non-locating bearing	Non-drive end

RELUBRICATION INTERVALS

Relubrication intervals for operating temperatures up to 70° C for 1000HRS

	3000 RPM		1500 RPM		1000 RPM		Quantity
Frame Size	Horizontal	Vertical	Horizontal	Vertical	Horizontal	Vertical	gr
180	4.00	2.00	9.00	4.50	13.00	7.50	15
200	3.50	1.75	8.00	4.00	12.00	6.00	20
225	3.00	1.50	7.50	3.75	11.00	5.50	23
250	2.00	1.00	7.00	3.50	10.00	5.00	26
280	1.50	0.75	6.50	3.25	9.00	4.50	40
315	1.00	0.50	4.00	2.00	8.00	4.00	55

BELT DRIVE

The data apply only to the normal drive end shaft extension of IM B3 motors with one speed.
Calculation of belt drive:

$$F_R = \frac{19120 \cdot P \cdot k}{D_1 \cdot n}$$

F_R = Radial shaft load in N
P = Output in kW
n = Speed in min^{-1}
D_1 = Pulley diameter in m
k = Belt tension factor, varying with the type of belt, assumed to be approximately:
3-4 for normal flat belt without idler pulley
2-2.5 for normal flat belt with idler pulley
2.2-2.5 for V-belt
For exact data apply to the belt manufacturer.

PERMISSIBLE AXIAL FORCES

Maximum permissible axial forces without additional radial forces*

Frame size	Horizontal shaft				Vertical shaft - force upwards				Vertical shaft - force downwards			
	3000 min^{-1} kN	1500 min^{-1} kN	1000 min^{-1} kN	750 min^{-1} kN	3000 min^{-1} kN	1500 min^{-1} kN	1000 min^{-1} kN	750 min^{-1} kN	3000 min^{-1} kN	1500 min^{-1} kN	1000 min^{-1} kN	750 min^{-1} kN
56	0.16	0.21	-	-	0.18	0.22	-	-	0.15	0.19	-	-
63	0.19	0.26	-	-	0.21	0.28	-	-	0.17	0.24	-	-
71	0.23	0.33	0.33	0.37	0.26	0.35	0.36	0.39	0.21	0.30	0.31	0.34
80	0.32	0.44	0.46	0.50	0.34	0.47	0.48	0.53	0.29	0.41	0.43	0.47
90	0.34	0.48	0.49	0.54	0.38	0.47	0.53	0.58	0.31	0.44	0.46	0.51
100	0.48	0.68	0.70	0.77	0.54	0.74	0.76	0.83	0.43	0.62	0.64	0.71
112	0.48	0.68	0.70	0.77	0.56	0.75	0.77	0.84	0.40	0.60	0.62	0.69
132 S	0.80	1.13	1.16	1.28	1.00	1.32	1.36	1.47	0.61	0.93	0.97	1.08
132 M	0.78	1.09	1.13	1.24	0.99	1.30	1.33	1.45	0.58	0.89	0.92	1.03
160 M	0.84	1.18	1.21	1.33	1.18	1.52	1.56	1.68	0.50	0.83	0.87	0.99
160 L	0.82	1.15	1.18	1.30	1.18	1.51	1.55	1.67	0.46	0.79	0.82	0.94
180	0.82	1.15	1.18	1.30	1.18	1.51	1.55	1.67	0.46	0.79	0.82	0.94
200	0.82	1.15	1.18	1.30	1.18	1.51	1.55	1.67	0.46	0.79	0.82	0.94
225	1.10	1.60	1.90	2.40	2.10	2.60	2.90	3.40	0.30	0.70	1.00	1.50
250	1.00	1.60	2.00	2.50	2.30	2.70	3.20	3.70	0.20	0.60	1.10	1.50
280	1.70	1.90	2.40	2.90	2.90	3.10	3.60	3.70	0.15	0.30	0.80	1.00
315	2.00	14.00	14.00	14.00	3.60	8.00	9.20	7.40	1.00	1.90	2.40	2.90

Values for 50 Hz. For service on 60 Hz, reduce values by 10%

* Consult according to direction of force

PERMISSIBLE RADIAL FORCES

Without additional axial force (Ball bearings)

Nominal life = 20.000 h (Lh10)

F_R = permissible radial force in kN in load point corresponding to half shaft extension

Frame size	3000 min $^{-1}$ kN	1500 min $^{-1}$ kN	1000 min $^{-1}$ kN	750 min $^{-1}$ kN
56	0.34	0.42	-	-
63	0.38	0.48	-	-
71	0.46	0.58	0.67	0.73
80	0.59	0.83	0.86	0.94
90	0.67	0.94	0.97	1.07
100	0.92	1.29	1.33	1.47
112	0.93	1.30	1.34	1.48
132 S	1.35	1.90	1.96	2.15
132 M	1.40	1.97	2.03	2.23
160 M	1.55	2.17	2.23	2.46
160 L	1.58	2.22	2.29	2.52
180 M	3.00	4.44	4.55	4.76
180 L	3.02	4.47	4.58	4.79
200 L	5.24	6.85	8.01	8.94
225 M	6.11	7.80	9.09	10.12
250 M	6.79	8.82	10.31	11.45
280 S	7.76	11.90	13.87	15.44
280 M	7.79	11.99	13.97	15.55
315 S/M	7.02	11.35	13.40	15.13
315 L	7.03	11.37	13.35	15.09

SPECIAL ENDSHIELDS AND FLANGES

Full range of smaller sized and over sized flanges

Frame size	Smaller sized Flange IM B5 [1]	Smaller sized Flange IM B14	Over sized Flange IM B5	Over sized Flange IM B14
56	NA	NA	NA	63
63	56	56	71 [3]	71-80
71	56-63	63	80-90	80-90
80	63-71	63-71	NA	90-100
90 S-L	63-71	71-80	100 [3]	100-112
100 L	71-80	90	NA	132
112 M	80 [2] -90 [2]	90	132 [7]	132
132 S	112 [2]	112	NA	160 [1] [4]
132 M	112	112	160 [4]	160
160 M	NA	132	NA	NA
160 L	NA	132	NA	NA

Possibility to fit over sized bearings

Frame size	IM B3	IM B5	IM B14
56	NA	NA	NA
63	6203-6205	6203	6203-6205
71	6204-6205	6204-6205	6204-6205
80	6205-6206	6205-6206	6205-6206
90 S-L	6206	6206-6308	6206
100 L	6306	6306-6208	6306
112 M	6208	6208	6208
132 S	6308-6309	6308	6308 [4]
132 M	6308-6309	6308-6309	6309
160 M	NA	6310	6310
160 L	NA	6310	6310

For higher output (progressive motor) please consult us

Aluminium endshields and flanges with steel insert

Frame size	Endshield DE	Endshield NDE	IM B5	IM B14
71	A	A	A	NA
80	A	A	A	A
90 S-L	A	A	NA	NA
100 L	A	A	A	NA
112 M	A	A	A	NA
132 S	NA	NA	NA	NA
132 M	NA	NA	A [5]	NA
160 M	NA	NA	NA	NA
160 L	NA	NA	NA	NA

Cast iron endshields and flanges

Frame size	Endshield DE	Endshield NDE	IM B5	IM B14	Regreasing device DE	Regreasing device NDE	Regreasing device IM B5	Regreasing device IM B14
71	NA	NA	NA	NA	NA	NA	NA	NA
80	A [6]	A [6]	NA	NA	NA	NA	NA	NA
90 S-L	A [6]	A [6]	NA	NA	NA	NA	NA	NA
100 L	A [6]	A [6]	NA	NA	NA	NA	NA	NA
112 M	A [6]	A [6]	NA	NA	NA	NA	NA	NA
132 S	A	A	A	A	NA	NA	A	A
132 M	A	A	A	A	A	A	A	A
160 M	A	A	A	A	A	A	A	A
160 L	A	A	A	A	A	A	A	A

A Available NA Not available
1) Not available for all motor ratings; consult us
2) Cast iron endshield with radial slotted holes
3) Not interchangeable with standard execution
4) Cast iron endshield
5) Only with oversized bearing (6308)
6) Special mechanical design
7) Only with oversized bearing (6208)

COOLING

Surface cooling, independent of the direction of rotation.
Motors type AM available without internal fan as type AG, e.g. for installation in a directed air stream (outputs on request).

VIBRATION

The amplitude of vibration in electric motors is governed by **EN 60034-14** *Mechanical vibration of rotating electrical machines with shaft heights 56 and larger - methods of measurement and limits.*
Standard motors are designed to vibration grade A (normal). Vibration grade B is available at extra cost.

Rotors are at present dynamically balanced with **half** key fitted as per DIN ISO 8821. Other balancing only on request.
The motors are identified as follows:

"H" or "blank" means balanced with *half key*
"F" means balanced with *full key*
"N" means *no key*

POSITION AND DIMENSIONS OF KEY

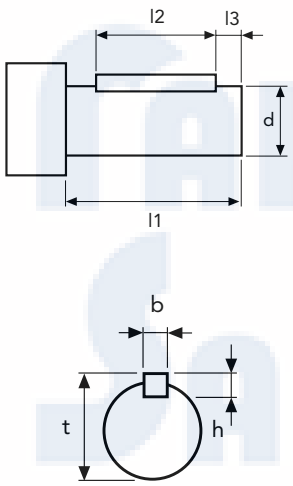

Frame size	Poles	d x l1	b x h	l2	l3	t
56		9 x 20	3 x 3	15	2.5	10.2
63		11 x 23	4 x 4	15	4	12.5
71		14 x 30	5 x 5	20	6	16
80		19 x 40	6 x 6	30	6	21.5
90		24 x 50	8 x 7	40	6	27
100		28 x 60	8 x 7	50	6	31
112		28 x 60	8 x 7	50	6	31
132		38 x 80	10 x 8	70	6	41
160		42 x 110	12 x 8	100	6	45
180		48 x 110	14 x 9	90	5	51.5
200		55 x 110	16 x 10	90	5	59
225	2	55 x 110	16 x 10	90	5	59
225	4	60 x 140	18 x 11	110	5	64
250	2	60 x 140	18 x 11	110	5	64
250	4	65 x 140	20 x 11	110	5	74.5
280	2	65 x 140	18 x 11	110	5	69
280	4	75 x 140	20 x 12	140	5	85
315	2	65 x 140	18 x 11	125	5	69
315	4	80 x 170	22 x 14	160	5	85

Dimensions in mm.
For larger shafts in special design the dimensions l2 and l3 are maintained.

ANTI-CONDENSATION HEATER

On request, motors which due to strong temperature fluctuations are exposed to condensation during standstill, can be fitted against surcharge with an anti-condensation heater (space heater).
For supply voltage and heater rating please refer to the following table:

Frame size	Supply voltage (V)	Heater rating per motor (W)
112 - 160	110 or 230	25
180 - 225	110 or 230	50
250 - 280	110 or 230	50
315	110 or 230	75

During operation of the motor, the heating must be switched off.

NOISE

The noise level of an electrical machine is determined by measuring the sound pressure level in accordance with curve A of the sound level meter to EN 60651 and is indicated in dB (A).
The permitted noise levels of electrical machines are fixed in EN 60034-9 (IEC 34-9). The noise level of our motors is well below these limit values.
Air-borne sound measurements are carried out in an anechoic testing chamber to EN 21680-ISO 1680.
Speed corresponding to a mains frequency of 50 Hz and the number of poles.

NOISE LEVELS

The noise values listed below refer to 50 Hz at rated voltage with a tolerance of up to + 3 dB(A).
Values for pole-changing motors on request. For 60 Hz supply values are 3-5 dB(A) higher.
Sound pressure level L_{pA} and sound power level L_{WA} for three-phase single-speed motors with dimensions and output ratings to IEC 60072

Frame	2 poles		4 poles		6 poles		8 poles	
size	LWA	LpA	LWA	LpA	LWA	LpA	LWA	LpA
56	57	48	47	38				
63	58	49	47	38				
71	61	52	51	42	49	40		
80	72	60	60	48	52	40	47	35
90	74	62	61	49	58	46	54	42
100	78	66	62	50	62	51	58	46
112	80	68	65	53	65	53	58	46
132	81	72	71	59	69	57	64	52
160	87	74	75	62	71	58	69	56
180	90	77	78	66	74	62	72	60
200	91	78	80	68	77	65	74	62
225	92	80	88	76	80	68	75	64
250	93	81	88	76	80	68	75	64
280	93	82	89	79	83	71	81	70
315	93	82	89	79	83	71	81	70

RATED VOLTAGE

For the rated voltage of the motors, **EN 60034-1** allows a **tolerance of ± 5 %**. According to **IEC 60038**, the mains voltages may have a **tolerance of ± 10 %**.

Therefore the three-phase motors are designed for the following rated voltage ranges (exceptions are shown in the data tables):

Mains voltage to IEC 60038	Rated voltage range of motor
230 V ± 10%	218-242 V ± 5%
400 V ± 10%	380-420 V ± 5%
690 V ± 10%	655-725 V ± 5%

Within the rated motor voltage range, the permissible maximum temperature is not exceeded. When the motors are operated at the limits of the voltage tolerance, the permissible overtemperature of the stator winding may be exceeded by 10 K.

Nameplates are marked with the maximum rated currents within the stated voltage ranges.

For brake motors, for motors in 500 V, 50 Hz design, and all not standard voltages, no voltage range is marked. The voltage tolerances to EN 60034-1 apply.

RATED FREQUENCY

Three-phase 50 Hz motors can also be operated on 60 Hz mains, provided the mains voltage increases proportionally to the frequency. The relative values for starting and breakaway torque remain nearly unchanged and slightly increase for the starting current. The rated speed increases by the factor 1.2 and output by factor 1.15. Should a motor designed for 50 Hz be operated at 60 Hz without the voltage being increased, the rated output of the motor cannot be increased. Under these operating conditions, rated speed increases by factor 1.2. The relative values for starting and breakaway torque are reduced by factor 0.82 and for starting current by factor 0.9.

Additionally to the voltage range for 50 Hz operation, three-phase single-speed motors (not brake motors) are also marked with the voltage range for 60 Hz operation.

Nameplates examples:

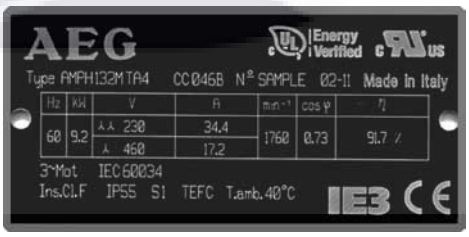

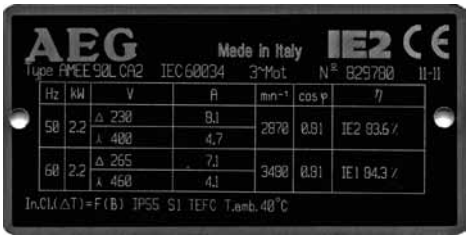

RATED CURRENT

For three-phase motors the rated currents listed in the data tables apply to an operating voltage of 400 V. The conversion to other operating voltages, with output and frequency remaining unchanged, is to be made as follows:

Nominal voltage (V)	230	380	**400**	440	500	660	690
Conversion factor x I_N	1.74	1.05	**1.0**	0.91	0.80	0.61	0.58

RATED TORQUE

$$\text{Rated torque in Nm} = 9550 \times \frac{\text{Rated power in kW}}{\text{Rated speed in min}^{-1}}$$

OUTPUT

The outputs stated in this catalogue are for constant load in continuous running duty S1 according to EN 60034-1, based on an ambient temperature of 40° C and installation at altitudes up to 1000 m above sea level.

For severe operating conditions, e.g. high switching rate, long run-up time or electric braking, a thermal reserve is necessary, which could call for higher thermal class or the use of a motor with a higher rating. In these cases we recommend to enquire with detailed information on the operating conditions.

OVERLOAD

At operating temperature three-phase motors are capable of withstanding an overload for 15 seconds at 1.5 times the rated torque at rated voltage. This overload is according to EN 60034-1 and will not result in excessive heating.
Utilizing thermal class F, motors can be operated continuously with an overload of 12%. Nevertheless this is not valid for motors which to catalogue are utilized to thermal class F.

CONNECTION

Motor output at 50 Hz	230 V Δ 400 V Y	400 V Δ 690 V Y	500 V Y	500 VΔ	690 VΔ
under 3 kW	standard	on request	on request	on request	-
4 to 5.5 kW	standard	standard	on request	on request	on request
≥ 7.5 kW	on request	standard	on request	on request	on request

INSULATION AND TEMPERATURE RISE

Class F insulation to EN 60034-1 is used throughout.
In standard design motors are intended for operation at 40° C ambient temperature with class B temperature rise only, with an overtemperature limit of 80 K. This also applies for the rated voltage range to IEC 60038. Exceptions are shown on the data tables.

Temperature rise (ΔT*) and maximum temperatures at the hottest points of the winding (T_{max}) according to the temperature classes of EN 60034-1.

	ΔT*	T_{max}
Class B	80 K	125° C
Class F	105 K	155° C
Class H	125 K	180° C

*Measurement by resistance method

Output reduction at ambient temperatures over 40° C

Ambient temperature	45° C	50° C	55° C	60° C
Class B Reduction of nominal output to approx.	95 %	90 %	85 %	80 %

When a winding is utilized to temperature class F (105K), no output reduction is required up to an ambient temperature of 55° C. *This does not apply to motors which in their standard design are already utilized to thermal class F.*

Installation at altitudes of more than 1000 m above sea level (see also EN 60034-1)

Altitude of installation	2000 m	3000 m	4000 m
At 40°C ambient temperature and thermal class B Rated output reduced to approx.	92 %	84 %	76 %
At 40°C ambient temperature and thermal class F Rated output reduced to approx.	89 %	79 %	68 %
Full nominal output to data tables with thermal class B and ambient temperature of	32° C	24° C	16° C
Full nominal output to data tables with thermal class F and ambient temperature of	30° C	19° C	9° C

STARTING RATE

The permissible number of starts per hour can be taken as given in the table below, provided the following conditions are met.
Additional moment of inertia ≤ moment of inertia of the rotor: load torque rising with the square of the speed up to nominal torque; starts at even intervals.

Shaft height	Permissible no. of starts per hour for		
	2 poles	4 poles	≥ 6 poles
56 - 71	100	250	350
80 - 100	60	140	160
112 - 132	30	60	80
160 - 180	15	30	50
200 - 225	8	15	30
250 - 315	4	8	12

For permissible number of starts for pole-changing motors and brake motors please consult us, indicating the complete operating conditions.

For the motors AMME and AMDE series, time between stop and restart of the motor must be higher than 15 s.

THERMAL PROTECTION

The decision on a particular type of thermal protection should be taken according to the actual operating conditions. Motors may be protected by means of current-dependent thermal protection switches, overcurrent relays and temperature detectors.

Thermal protection is possible as follows:

- Thermal protection switch with bimetal release
- Thermistor protection with semiconductor temperature detectors (PTC) in the stator winding in connection with release (if required, with additional motor protection switch).
- Bimetal temperature detector as N/C or N/O in the stator winding (if required, with additional motor protection switch).
- Resistance thermometer for monitoring winding and bearing temperature.

Should protection of the motor be required, we install protection switch with bimetal release (semiconductor temperature detectors on request).

Operating specifications
Thermal cut-out

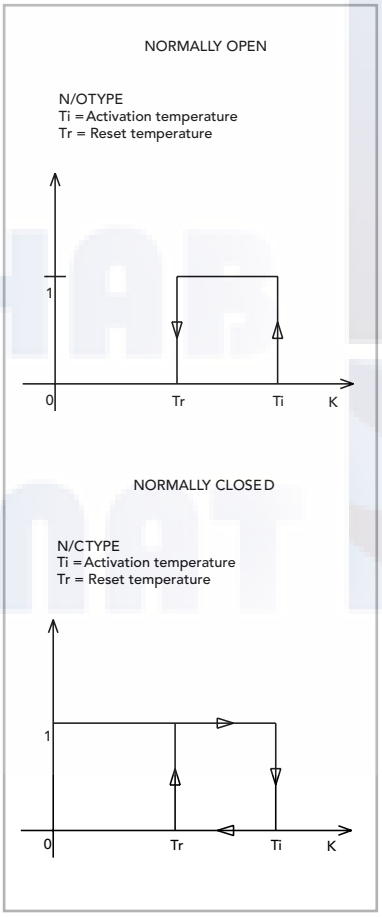

Operating specifications
of the thermistors

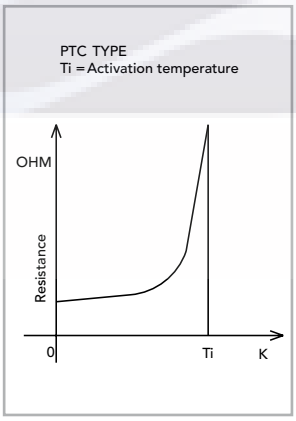

EXAMPLES OF CONNECTION

Protection method

Motor protection switch with thermal and electromagnetic overcurrent release

Protection against:
- Overload in continuous service
- Locked rotor

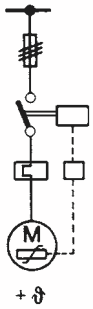

Contactor with overcurrent relay
Thermistor protection and fuse

In service against:
- Overload in continous service
- Long starting and braking periods
- High switching rate

In case of fault against:
- Obstruction of cooling
- Increased ambient temperature
- Single-phase operation
- Frequency fluctuations
- Switching against locked rotor

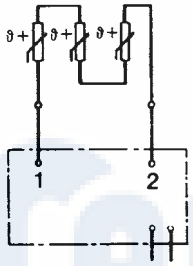

Semiconductor temperature detector with release

In service against:
- Overload in continous service
- Long starting and braking periods
- High switching rate

In case of fault against:
- Obstruction of cooling
- Increased ambient temperature
- Single-phase operation
- Frequency fluctuations
- Switching against locked rotor

AUXILIARIES

Encoder (standard design)

Pulses per revolution	200-2048
Max outputs frequency	100 kHz
Power supply	$5V_{dc}$
Electronics	line driver
Current consumption without load	100 mA
Outputs	2 signals with rectangular pulses $\overline{A}$, $\overline{B}$ 2 signals with inverted rectangular pulses A, B zero pulse and inverted zero pulse
Pulse displacement between outputs	90°
Protection	IP 54
Max speed	3000 (6000) min^{-1}
Operating temperature	-10°C ÷ 85°C

MOTORS FOR NORMAL CONTINUOUS DUTY (S1) AND NORMAL OPERATING CONDITIONS

Quotation (if submitted): No./Date
Quantity: Units
Designation: Type
Output (for pole-changing motors, outputs referred to speeds): kW
Speed (for pole-changing motors, outputs referred to speeds): min-1
Direction of rotation (viewed on drive end)
Mounting arrangement (to IEC 60034-7)
Degree of protection, motor/terminal box (to IEC 60034-5)
Mains voltage: V
Mains frequency: Hz
Method of starting (direct-on-line or Y-Δ)
Location of terminal box
Machine to be driven

Dimensions of cables, if these differ from those allocated by VDE 0100, referred to an ambient temperature of 40° C, or when aluminium conductors are used. It should be stated when parallel connected conductors are used.

ADDITIONAL INFORMATION FOR SPECIAL DESIGNS

Second or non-standard shaft extension
Radial sealing ring
Paint coating
Corrosive protection
Vibration level
Anti-condensation heating
Temperature detectors
Noise requirements
Mechanical or electrical brake
Special stipulations

ADDITIONAL INFORMATION FOR SPECIAL DUTIES

S 2: ... min (short-time duty)
S 3: ... % - ... min (intermittent duty)
S 4: ... % - J_M ... kgm^2 - J_{ext} ... kgm^2 (intermittent duty with starting)
S 5: ... % - J_M ... kgm^2 - J_{ext} ... kgm^2 (intermittent duty with electric braking)
S 6: ... % - min (continuous-operation periodic duty with intermittent load)
S 7: .J_M ... kgm^2 - J_{ext} ... kgm^2 (continuous-operation periodic duty with electric braking)
S 8: .J_M ... kgm^2 - J_{ext} ... kgm^2 (continuous-operation periodic duty with speed changes)
S 9: ... kW (continuous duty with non-periodic load and speed variations).
For this duty type suitable full load values should be taken as the overload concept.
S10: p/Δt .... r .... TL (Duty with discrete constant loads).

ADDITIONAL INFORMATION FOR SPECIAL OPERATING CONDITIONS

Starting conditions (no-load or loaded starting)
Shock loads
Load torque curve during run-up (characteristic)
Moment of inertia (J_{ext}) referred to the motor shaft: kgm^2
Description of the type of drive (direct coupling, flat or V-belt, straight or helical gears, sprocket, crank, eccentric cam, etc.)
Radial force (or diameter of drive element): N
Direction of force and point of application (distance from shaft shoulder or width of drive element): mm
Axial force and direction of application (pull/thrust): N
Ambient conditions (e.g. increased humidity, dust accumulation, corrosive gases or vapours, increased or extremely low ambient temperature, outdoor installation, installation at altitudes over 1000 m above sea level, external vibration, etc.)

THREE-PHASE MOTORS

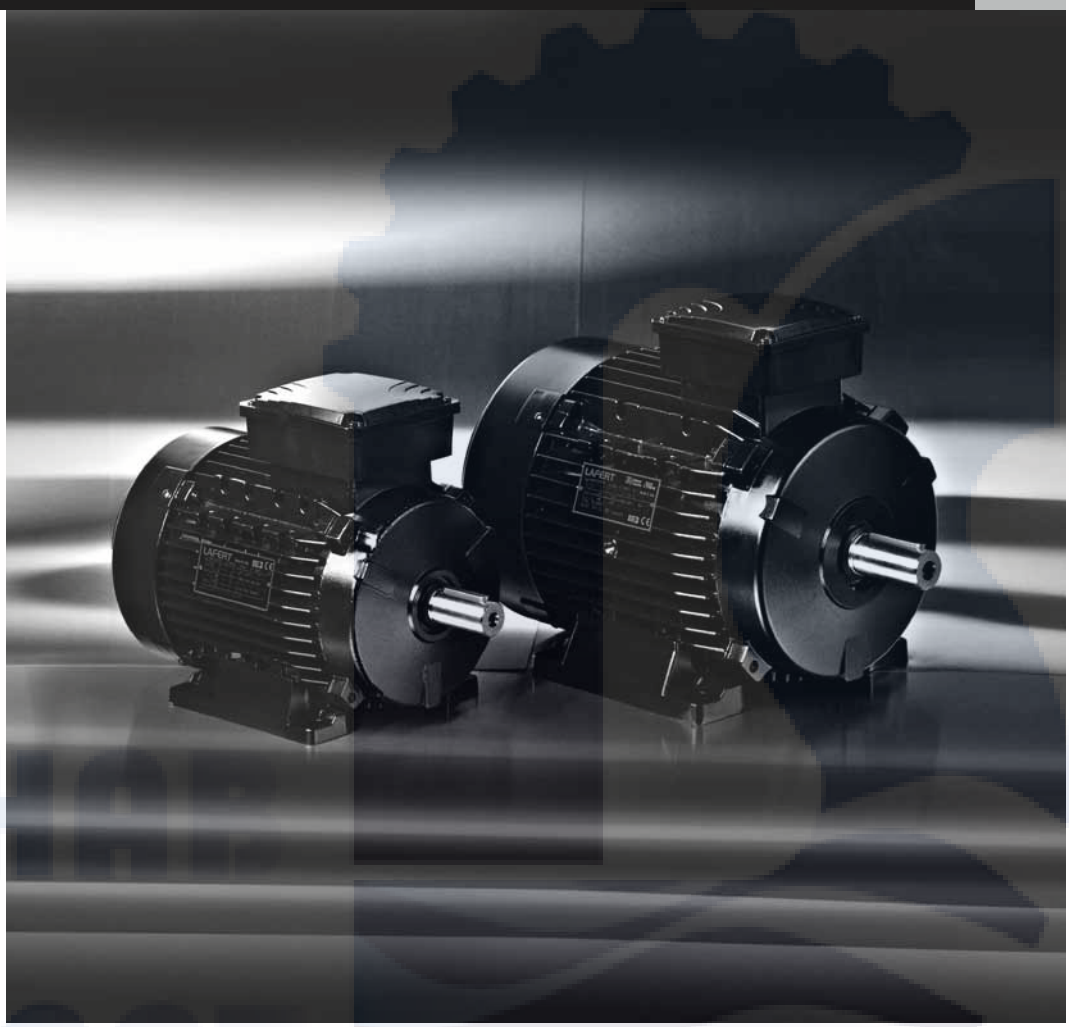

TERMINAL BOX

The location of the terminal box in standard design is on top; on the right or on the left are possible.

Motors 71-160 frame size have removable feet for easy change of terminal box position

For motors with mountings IM B6, IM B7, IM B8, IM V5, IM V6 the location of the terminal box is related to an IM B3 mounting.

The position of the entry openings can be adjusted to suit the existing connection facilities by turning through 90°. Should special accessories be used (temperature detectors, anti-condensation heating, etc.) please enquire.

For motors in standard design, the cable gland does not belong to our scope of delivery.

For plastic terminal boxes, only plastic glands may be used (shock protection).

When using screened leads, a metal terminal box is required.

Direction of cable entries

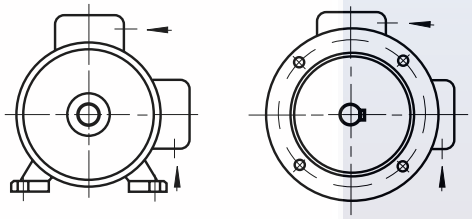

Frame size	Degree of protection	Thread for cable entry		Max. cable section	Terminal thread	Max. external cable diam.
		Metric [1]	Pg [2]	mm²		mm
56 - 71	IP 55	1 x M16/1 x M20	1 x Pg 11/1 x Pg 13.5	2.5	M4	12
80	IP 55	1 x M25/1 x M20	1 x Pg 13.5/1 x Pg 16	2.5	M4	16
90 - 112	IP 55	1 x M25/1 x M20	1 x Pg 13.5/1 x Pg 16	4	M5	16
132	IP 55	2 x M32	2 x Pg 21	4	M5	20
160	IP 55	2 x M40	2 x Pg 29	16	M6	28
180	IP 55	2 x M40/1 x M20		35	M8	28
200	IP 55	2 x M40/1 x M25		35	M8	34
225	IP 55	2 x M50/1 x M25		50	M10	34
250 - 280	IP 55	2 x M50/1 x M25		50	M10	40
315	IP 55	2 x M63/1 x M25 [3]		185	M12	48

1) Pitch 1.5
2) Pg thread to DIN 40 430 (on request)
3) Terminal box with unscrewable cable entry plate

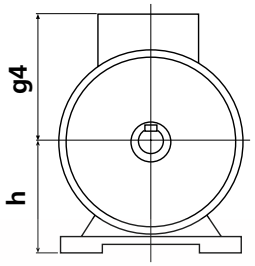

Terminal box on top

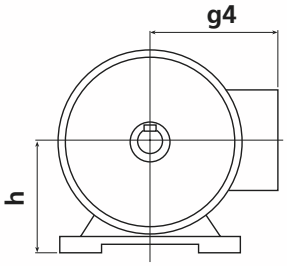

Terminal box at the side

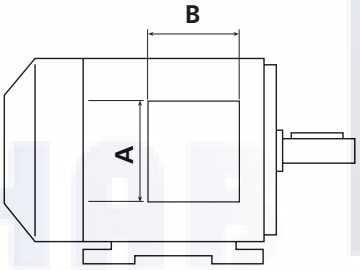

left [1)]

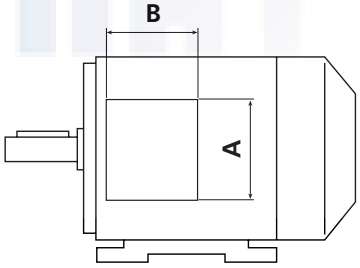

right

1) On frame size 56-63 the terminal box is supplied displaced towards the non-drive end

STANDARD DESIGN

Frame size h	g_4	A	B	Material
56	98	91	93	Plastic UL 94 V0
63	103	91	93	Plastic UL 94 V0
71	112	91	93	Plastic UL 94 V0
80	129	111	116	Plastic UL 94 V0
90	138	111	116	Plastic UL 94 V0
100	145	111	116	Plastic UL 94 V0
112	161	111	116	Plastic UL 94 V0
132	198	133	133	Aluminium
160	238	150	150	Aluminium
180	268	187	162	Cast Iron
200	300	233	186	Cast Iron
225	335	233	186	Cast Iron
250	366	260	218	Cast Iron
280	408	260	218	Cast Iron
315	530	320	280	Cast Iron

SPECIAL DESIGN

Frame size h	g_4	A	B	Material
56	100	94	94	Aluminium
63	105	94	94	Aluminium
71	114	94	94	Aluminium
80	139	110	110	Aluminium
90	148	110	110	Aluminium
100	155	110	110	Aluminium
112	171	110	110	Aluminium
180	285	209	220	Cast Iron
200	310	241	246	Cast Iron
225	334	272	254	Cast Iron
250	375	272	254	Cast Iron
280	409	272	254	Cast Iron

CONNECTION DIAGRAMS

Windings of standard three-phase single speed motors can be connected either in star or delta connection.

STAR CONNECTION

A star connection is obtained by connecting W2, U2, V2 terminals to eachother and the U1, V1, W1 terminals to the mains. The phase current and voltage are:

$I_{ph} = I_n$; $U_{ph} = U_n / \sqrt{3}$

where I_n is the line current and U_n the line voltage referred to the star connection.

DELTA CONNECTION

A delta connection is obtained by connecting the end of a phase to the beginning of the next phase.
The phase current I_{ph} and the phase voltage U_{ph} are:

$I_{ph} = I_n / \sqrt{3}$; $U_{ph} = U_n$

where I_n and U_n are referred to the delta connection.

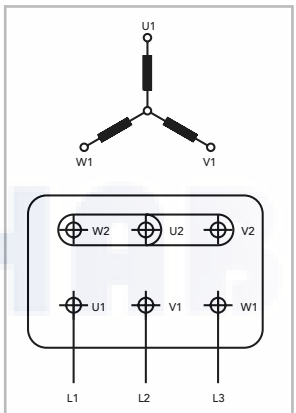

Star connection

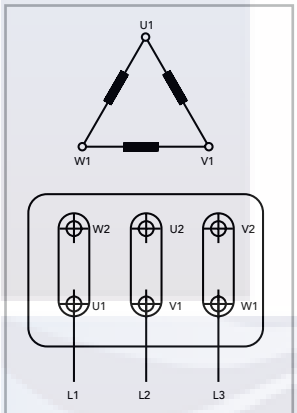

Delta connection

STAR-DELTA STARTING

Star-delta starting allows a peak current reduction. It can be used only when the reduced starting torque obtained is higher than the resistant torque. Actually, it should be noted that the torque of an induction squirrel-cage motor is directly proportional to the square of the voltage. Motors whose rated voltage with delta connection corresponds to the mains voltage, can be started with the star-delta method.

All motors can be supplied with windings designed for star-delta starting (for example: 400 V Δ / 690 V Y).

TWO SPEED MOTORS

Standard pole-changing motors are designed for single voltage and direct-on-line starting.

When the ratio between the two speeds is from 1 to 2, the standard motors have one single winding (Dahlander connection). For the other speeds, the motors have two separate windings.

AM/AMV - two separate windings

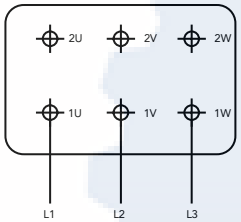

Low speed

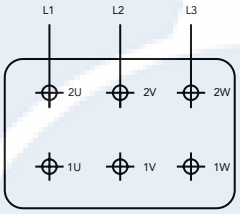

High speed

AM - Dahlander connection Δ/YY

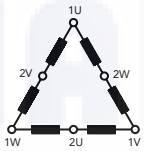

Low speed

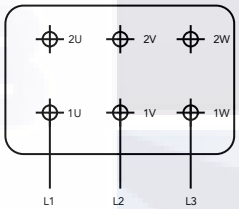

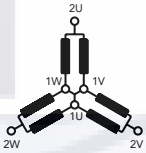

High speed

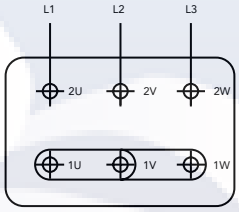

AMV - Dahlander connection Y/YY

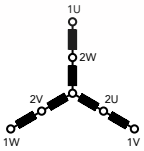

Low speed

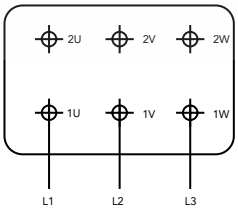

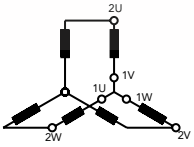

High speed

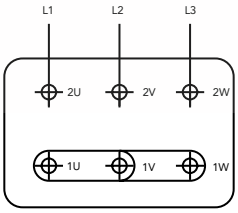

CAGE MOTORS DRIVEN BY FREQUENCY CONVERTERS

Motors frame sizes 90 upwards in standard design are suitable for operation on static frequency converters, taking into account the following remarks:

- Maximum converter output voltage 500V at peak voltages Û ≤ 1460V and du/dt ≤ 13 kV/us. For higher converter output voltages or stresses, a special insulation is required.
- With square characteristic of the load torque, motors can be driven with their rated torque.
- For constant torque, the rated torque of motors with internal cooling must be reduced due to reduced cooling air inlet. Depending on the control range, the use of an external fan would be advisable.
- The motors frame sizes 90 – 112 are suitable for a maximum output frequency of the converter of 60 Hz (e.g. applications with square torque, control range 1:10, such as pumps and fans). For higher frequencies, a special range with type designation AMI is available on request. From frame size 132 upwards, motors designed Δ/Y 230/400 V, 50 Hz can be operated in delta with a maximum frequency of 87 Hz (observe mechanical limit speed).

The motors frame size 56 – 80 can be operated on single-phase converters up to maximum 60 Hz. (Special range with type designation AMI for operation on three-phase converters with output voltage ≥ 400 V and output frequency > 60 Hz).

The electrical values and dimensions of the range AMI in frame size 56 to 112 are identical to AM motors (see data tables pages 50-52).

Note: 75 kW, 2 poles and up - insulated bearing are recomended when inverter fed.

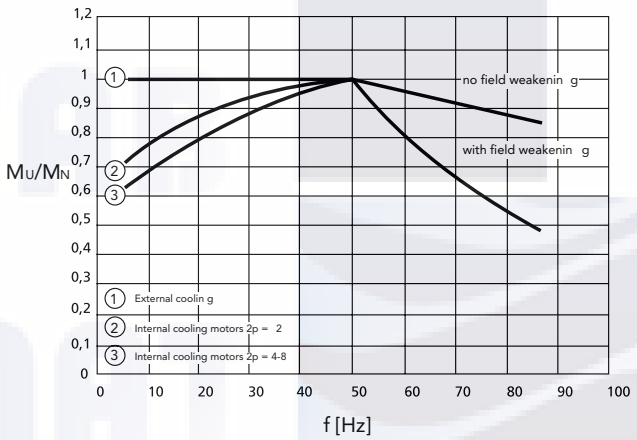

Torque caracteristics of three-phase motors driven by frequency converters.

NOISE

Depending on the operating point and converter type, converter-fed motors produce between approx. 4 - 10 dB(A) higher noise values than when supplied from the mains. For motors driven with a frequency over 50 Hz, more fan noise is produced. We recommend the use of an external fan.

SPARE PARTS

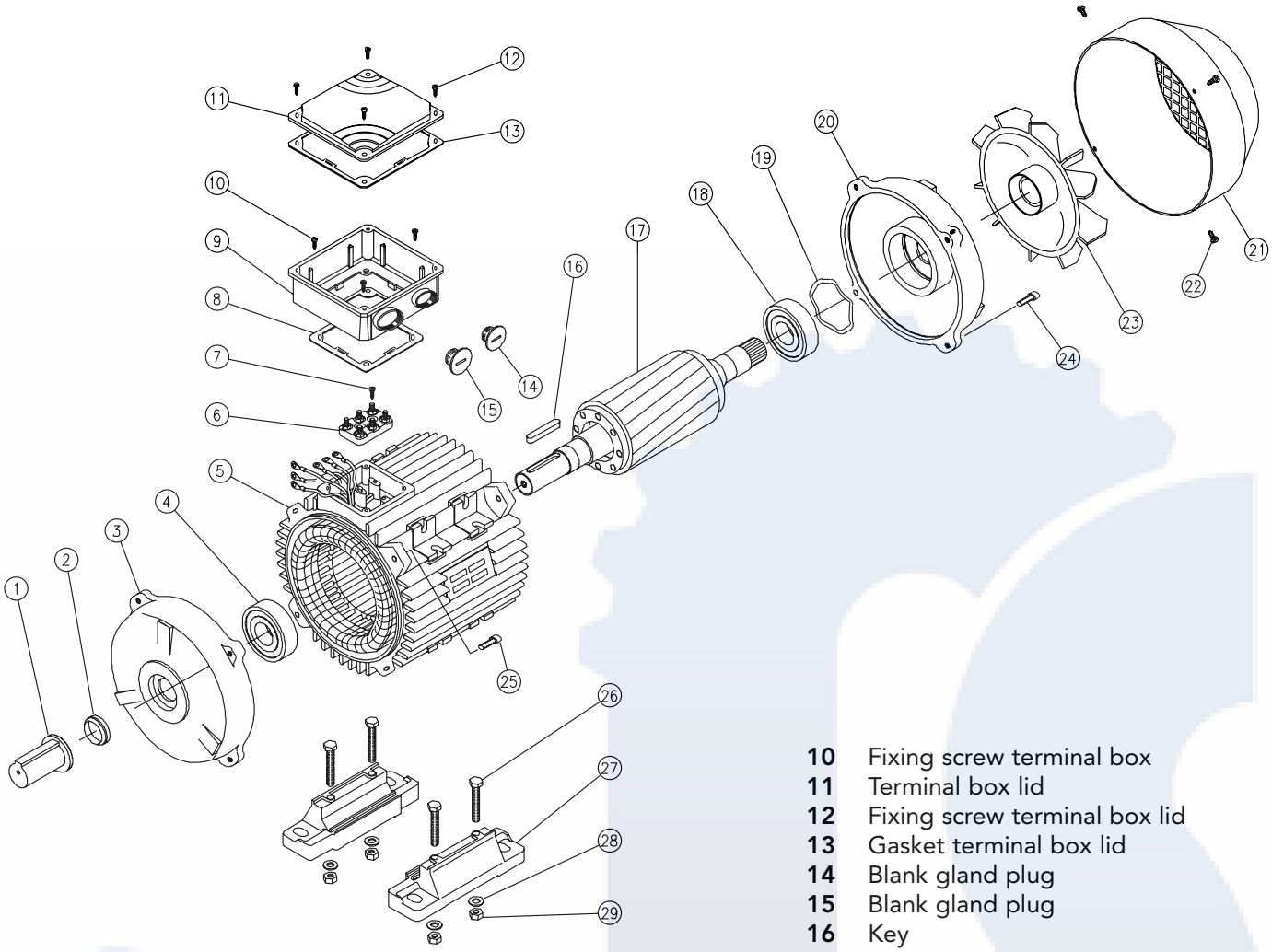

PART DESCRIPTION

1 Shaft protection
2 Dust seal drive end
3 Endshield drive end
4 Bearing drive end
5 Stator frame
6 Terminal board
7 Fixing screw terminal board
8 Gasket terminal box
9 Terminal box
10 Fixing screw terminal box
11 Terminal box lid
12 Fixing screw terminal box lid
13 Gasket terminal box lid
14 Blank gland plug
15 Blank gland plug
16 Key
17 Rotor complete
18 Bearing non-drive end
19 Pre-load washer
20 Endshield non-drive end
21 Fan cover
22 Fixing screw fan cover
23 Fan
24 Fixing bolt endshield non-drive end
25 Fixing bolt endshield drive end
26 Fixing bolt motor feet
27 Motor feet
28 Fixing washer motor feet
29 Fixing nut motor feet

Only motors 71-160 frame size have removable feet for easy change of terminal box position

In enquires and orders for spare parts please state always:
Designation of spare part, motor type, mounting arrangement, motor serial number (Product No. when available)
Enquires and orders cannot be handled without these data.

TYPE DESIGNATION

Apart from other information, it is necessary to specify the exact type designation in all enquiries, when ordering spare parts or replacement motors or when asking for documentary information.

The type designation of our motors comprises 8 points of reference, each of which may consist of several letters and/or numerals. The meaning of each symbol can be seen from the following table. For motors not included in our standard range, special symbols may be used which are not listed here.

Ref. point	Meaning	Description of symbols used for our motors	
1	Type of motor	A	Asynchronous motor
2	Cooling	M	Surface cooled with external fan, cooling fins
		G	Surface cooled without external fan, cooling fins
		MFV	Surface cooled with forced ventilation, cooling fins
3	Type of motor	blank	Three-phase motor, standard efficiency IE1code
		EE	Three-phase motor, high efficiency IE2 code
		H	Three-phase motor, efficiency to EPACT regulations
		HE	Three-phase motor, high efficiency IE2 code 50 - 60 Hz
		PE	Three-phase motor, premium efficiency IE3 code
		PH	Three-phase motor, premium efficiency EISA regulations
		V	Three-phase two speed motor for driving fans
		I	Special design for three-phase motor driven with frequency converter
4	Shaft centre height	56, 63, 71, 80, 90, 100, 112, 132,160, 180, 200, 225, 250, 280, 315	
5	Frame length	Z	
		S	Mechanical dimension (short)
		M	Mechanical dimension (medium)
		L	Mechanical dimension (long)
6	Mechanical design and output value	A	
		B	
		...	
		Z	
7	Frame material	A	Aluminium frame
		G	Cast iron frame
8	Number of poles	2 - 4/2	
		4 - 8/4	
		6 - 4/6	
		8 - 6/8	

Example

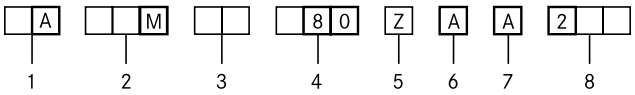

PREMIUM EFFICIENCY THREE-PHASE MOTORS – IE3

EFFICIENCY LEVEL ACCORDING TO IEC 60034-30;2008
EFFICIENCY TESTING METHOD IEC 60034-2-1;2007

NOMINAL FULL LOAD EFFICIENCY ACCORDING TO IE3 CODE @ 400 V - 50 HZ

FOR MAINS VOLTAGE 400 V - 50 HZ

IE3

TEMPERATURE RISE TO CLASS B

Type		kW	HP	min^{-1}	M_N Nm	IE3 η 50%	IE3 η 75%	IE3 η 100%	cos φ	I_N 400V	I_A/I_N	M_A/M_N	M_S/M_N	M_K/M_N	J 10^{-3} kgm^2	kg
3000 min^{-1} (2 poles)																
AMPE 90S AA	**2**	1.5	2	2910	4.9	80.1	83.8	85.0	0.72	3.5	9.1	3.9	4.3	4.6	1.6	14
AMPE 90L BA	**2**	2.2	3	2865	7.3	84.8	85.6	86.0	0.86	4.3	7.9	4.5	4.2	4.7	1.8	16
AMPE 100L AA	**2**	3	4	2900	9.9	84.6	86.8	87.1	0.85	5.8	10.9	5.5	3.5	4.5	4	22.8
AMPE 112M AA	**2**	3.7	5	2950	12.0	86.3	88.9	89.9	0.83	7.1	12.8	5.2	2.3	3.8	8.6	33.6
AMPE 112M BA	**2**	4	5.5	2945	13.0	86.9	88.4	90.1	0.85	7.5	12.6	4.7	2.3	3.8	8.6	33.6
AMPE 112M CA	**2**	5.5	7.5	2935	17.9	85.6	88.3	89.2	0.78	11.3	11.7	4.7	2.7	4	8.6	33.6
AMPE 132S ZA	**2**	5.5	7.5	2920	18.0	88.2	89.7	89.8	0.88	10.0	7.7	3.2	2.9	3.6	20.5	53
AMPE 132S TA	**2**	7.5	10	2930	24.4	89.4	91.0	91.1	0.88	13.5	7.7	3.6	3.3	4.2	22.8	56
AMPE 132M TA	**2**	9.2	12.4	2935	29.9	89.4	91.0	91.2	0.85	17.0	9.7	4.2	3.9	5.1	25	59
AMPE 132M RA	**2**	11	15	2935	35.8	89.2	90.8	91.2	0.81	21.4	9.5	4.2	3.7	4.9	25	59
AMPE 160M YA	**2**	11	15	2935	35.8	88.7	90.5	91.2	0.89	19.5	11.1	3.7	2.7	4.7	51.7	87.8
AMPE 160M ZA	**2**	15	20	2945	48.6	89.5	91.4	92.0	0.88	26.7	12.5	4.6	3.3	5.9	64	104
AMPE 160L ZA	**2**	18.5	25	2945	60.0	89.7	91.7	92.4	0.82	35.3	12.8	4.9	3.5	6.3	64	104
AMPE 160L TA	**2**	22	30	2930	71.7	91.6	92.6	92.7	0.85	40.2	10.9	4.1	3.0	5.3	64	104

For dimensions AMPE 2 poles motors, please see dimensions AMHE motors

Type		kW	HP	min^{-1}	M_N Nm	IE3 η 50%	IE3 η 75%	IE3 η 100%	cos φ	I_N 400V	I_A/I_N	M_A/M_N	M_S/M_N	M_K/M_N	J 10^{-3} kgm^2	kg
1500 min^{-1} (4 poles)																
AMPE 90S AA	**4**	1.1	1.5	1445	7.3	82.3	85.2	85.8	0.70	2.6	8.5	4.6	4.5	4.9	3.7	16.4
AMPE 90L BA	**4**	1.5	2	1420	10.1	84.7	85.4	85.7	0.76	3.3	7.8	4.1	4.0	4.3	3.7	16.4
AMPE 90L CA	**4**	1.8	2.4	1420	12.1	83.8	84.9	85.3	0.70	4.3	8.0	4.1	4.0	4.3	3.7	16.4
AMPE 112M AA	**4**	3.7	5	1450	24.4	87.7	88.6	88.8	0.80	7.5	9.9	3.3	2.7	4.9	16.4	36
AMPE 112M BA	**4**	4	5.5	1445	26.4	87.9	88.5	88.8	0.82	7.9	9.3	3.1	2.4	4.6	16.4	36
AMPE 132S ZA	**4**	5.5	7.5	1450	36.2	90.6	91.0	91.2	0.82	10.6	9.4	3.7	3.2	4.3	36	65
AMPE 132M ZA	**4**	7.5	10	1465	48.9	89.8	91.2	91.5	0.68	17.5	9.7	4.4	3.7	5.1	45	79
AMPE 132M TA	**4**	9.2	12.4	1455	60.4	90.6	91.2	91.3	0.74	19.7	9.8	4.9	4.2	5.8	57	98
AMPE 160M ZA	**4**	11	15	1470	71.5	92.2	92.6	92.9	0.79	21.6	10.1	4.6	3.3	4.9	120.7	114
AMPE 160L ZA	**4**	15	20	1465	97.8	92.1	92.5	92.8	0.78	29.9	10.1	4.4	3.2	4.7	135	120

For dimensions AMPE 4 poles motors, please consult us

PREMIUM EFFICIENCY THREE-PHASE MOTORS – IE3

EFFICIENCY LEVEL ACCORDING TO EISA
EFFICIENCY TESTING METHOD CSA C390-10
VERIFIED BY UL ENVIRONMENT

EFFICIENCY LEVEL ACCORDING TO IEC 60034-30;2008
EFFICIENCY TESTING METHOD IEC 60034-2-1;2007

NOMINAL FULL LOAD EFFICIENCY ACCORDING TO NEMA MG 1 - TABLE 12-12 (PREMIUM EFFICIENCY)

FOR MAINS VOLTAGE
460 V - 60 HZ

IE3 c US c UL Energy Verified

TEMPERATURE RISE TO CLASS B

Type		kW	HP	min^{-1}	M_N Nm	IE3 η 50%	IE3 η 75%	IE3 η 100%	cos φ	I_N 460V	I_A/I_N	M_A/M_N	M_S/M_N	M_K/M_N	J 10^{-3} kgm^2	kg
3600 min^{-1} (2 poles)																
AMPH 90S AA	**2**	1.5	2	3515	4.1	81.2	84.7	85.5	0.78	2.8	10.0	3.7	3.6	4.3	1.6	14.0
AMPH 90L BA	**2**	2.2	3	3480	6.0	83.6	86.1	86.5	0.84	3.8	8.5	4.4	4	4.4	1.8	16.0
AMPH 100L AA	**2**	3	4	3515	8.2	85.8	88.1	88.5	0.86	4.9	10.5	5.6	5.3	5.3	4.0	22.8
AMPH 112M AA	**2**	3.7	5	3550	10.0	84.0	87.6	88.5	0.86	6.1	16.7	5.1	1.9	5.2	8.6	33.6
AMPH 112M BA	**2**	4	5.5	3540	10.8	85.3	88.0	88.5	0.87	6.5	15.7	4.7	1.7	4.8	8.6	33.6
AMPH 112M CA	**2**	5.5	7.5	3530	14.9	86.2	89.0	89.5	0.86	8.9	14.4	4.5	2.5	4.3	8.6	33.6
AMPH 132S ZA	**2**	5.5	7.5	3540	14.8	87.3	89.6	89.5	0.88	8.8	10.2	3.0	2.6	3.3	20.5	53.0
AMPH 132S TA	**2**	7.5	10	3540	20.2	88.0	90.3	90.2	0.87	12.0	12.0	3.4	2.9	3.9	22.8	56.0
AMPH 132M TA	**2**	9.2	12.4	3545	24.8	87.7	90.1	90.2	0.88	14.5	10.0	4.0	3.5	4.7	25.0	59.0
AMPH 132M RA	**2**	11	15	3535	29.7	87.5	90.4	91.0	0.86	17.7	10.7	4.0	3.5	4.7	25.0	59.0
AMPH 160M YA	**2**	11	15	3550	29.6	86.6	90.0	91.0	0.89	17.0	10.8	3.5	2.5	4.5	51.7	87.8
AMPH 160M ZA	**2**	15	20	3555	40.3	90.1	92.0	91.0	0.85	24.4	12.2	4.4	3.1	5.6	64.0	104
AMPH 160L ZA	**2**	18.5	25	3555	49.7	90.0	92.2	91.7	0.82	31.0	12.5	4.6	3.3	6.0	64.0	104
AMPH 160L TA	**2**	22	30	3540	59.3	90.7	92.5	91.7	0.84	35.8	10.6	3.9	2.8	5.0	64.0	104

For dimensions AMPH 2 poles motors, please see dimensions AMH motors

Type		kW	HP	min^{-1}	M_N Nm	IE3 η 50%	IE3 η 75%	IE3 η 100%	cos φ	I_N 460V	I_A/I_N	M_A/M_N	M_S/M_N	M_K/M_N	J 10^{-3} kgm^2	kg
1800 min^{-1} (4 poles)																
AMPH 90S AA	**4**	1.1	1.5	1745	6.0	82.8	85.6	86.5	0.7	2.2	8.2	4.4	4.3	4.6	3.7	16.4
AMPH 90L BA	**4**	1.5	2	1735	8.3	83.5	86.2	86.5	0.7	2.9	7.5	3.8	3.7	4.0	3.7	16.4
AMPH 90L CA	**4**	1.8	2.4	1730	9.9	85.2	86.7	86.5	0.7	3.8	7.8	3.9	3.8	4.1	3.7	16.4
AMPH 112M AA	**4**	3.7	5	1765	20.0	87.3	89.3	89.5	0.8	6.5	9.6	3.1	2.5	4.6	16.4	36.0
AMPH 112M BA	**4**	4	5.5	1760	21.7	87.7	89.4	89.5	0.8	6.9	9	2.9	2.3	4.3	16.4	36.0
AMPH 132S ZA	**4**	5.5	7.5	1760	29.8	91.0	92.1	91.7	0.8	9.3	9.1	3.5	3	4.1	36.0	65.0
AMPH 132M ZA	**4**	7.5	10	1760	40.7	90.8	91.5	91.7	0.8	13	9.4	4.1	3.5	4.8	45.0	79.0
AMPH 132M TA	**4**	9.2	12.4	1760	49.9	90.9	91.6	91.7	0.7	17.2	9.5	4.7	4	5.5	57.0	98.0
AMPH 160M ZA	**4**	11	15	1770	59.3	91.5	92.5	92.4	0.8	18.7	9.8	4.4	3.1	4.6	120.7	114
AMPH 160L ZA	**4**	15	20	1765	81.2	92.4	93.0	93.0	0.8	26.3	9.8	4.2	3	4.4	135.0	120

For dimensions AMPH 4 poles motors, please consult us

HIGH EFFICIENCY THREE-PHASE MOTORS – IE2

EFFICIENCY LEVEL ACCORDING TO IEC 60034-30;2008
EFFICIENCY TESTING METHOD IEC 60034-2-1;2007

NOMINAL FULL LOAD EFFICIENCY ACCORDING TO IE2 CODE @ 400 V - 50 HZ; IE2 CODE @ 460 V - 60 HZ AND NEMA MG 1 - TABLE 12-11 (EPACT) @ 460 V - 60 HZ

Performance data referred @ 400 V - 50 Hz. For performance data @ 460 V - 60 Hz, please consult us.

FOR MAINS VOLTAGE
400 V - 50 HZ
460 V - 60 HZ

IE2

TEMPERATURE RISE TO CLASS B

Type		kW	HP	min^{-1}	M_N Nm	IE2 η 50%	IE2 η 75%	IE2 η 100%	cos φ	I_N 400V	I_A/I_N	M_A/M_N	M_S/M_N	M_K/M_N	J 10^{-3} kgm^2	kg
3000 min^{-1} (2 poles)																
AMHE 71Z AA	2*	0.75	1	2865	2.5	75.0	78.1	79.4	0.71	1.9	5.2	3.1	3.0	3.1	0.69	8.2
AMHE 80Z AA	2	0.75	1	2900	2.5	77.3	78.5	80.5	0.78	1.7	8.4	3.6	3.4	3.6	0.7	9.5
AMHE 80Z BA	2	1.1	1.5	2880	3.6	79.5	81.2	81.5	0.78	2.5	9.5	3.6	3.4	3.6	0.89	11.1
AMHE 80Z CA	2*	1.5	2	2880	5.0	80.5	82.1	82.4	0.78	3.4	7.8	3.5	3.4	3.6	1.1	13.5
AMHE 90S AA	2	1.5	2	2880	5.0	81.0	82.8	82.8	0.80	3.2	10.1	3.6	3.1	4.0	1.56	14.0
AMHE 90L CA	2	2.2	3	2860	7.3	82.5	84.0	84.0	0.85	4.4	10.1	3.5	3.2	3.7	1.8	16.0
AMHE 90L DA	2*	3	4	2880	9.9	85.0	86.0	85.6	0.82	6.1	9.9	3.5	3.3	3.8	2.0	18.0
AMHE 100L AA	2	3	4	2920	9.8	84.1	85.8	85.5	0.84	5.9	10.3	3.5	3.0	4.0	4.05	22.8
AMHE 100L BA	2*	4	5.5	2920	13.1	85.2	86.4	86.1	0.86	7.8	10.4	3.3	3.0	3.8	4.1	22.8
AMHE 112M AA	2	4	5.5	2940	13.0	85.5	87.0	86.8	0.88	7.6	10.7	2.9	2.1	3.3	6.48	27.4
AMHE 112M BA	2*	5.5	7.5	2920	18.0	85.8	87.4	87.3	0.88	10.4	9.9	3.0	2.1	3.2	8.58	34.0
AMHE 112M CA	2*	7.5	10	2900	24.7	86.5	88.3	88.3	0.87	14.2	9.1	3.0	2.2	3.4	10.50	36.0
AMHE 132S YA	2	5.5	7.5	2900	18.1	86.0	88.0	87.9	0.89	10.2	8.6	2.7	2.3	3.2	14.0	46.0
AMHE 132S ZA	2	7.5	10	2900	24.7	86.3	88.6	88.4	0.89	13.8	8.9	2.8	2.5	3.3	16.0	53.0
AMHE 132M ZA	2	9.2	12.5	2920	30.1	88.4	89.9	90.0	0.87	16.9	9.4	3.2	3	3.8	17.5	58.0
AMHE 132M RA	2*	11	15	2920	36.0	88.1	90.0	89.7	0.90	19.8	9.7	3.8	2.6	4.0	17.5	58.0
AMHE 132M TA	2*	15	20	2920	49.1	88.9	90.6	90.3	0.89	27.0	9.7	3.8	2.2	4.0	21.0	75.0
AMHE 160M YA	2	11	15	2930	35.9	88.9	90.2	90.0	0.87	20.4	9.3	2.4	2.2	3.1	51.75	77.0
AMHE 160M ZA	2	15	20	2930	48.9	90.0	91.0	90.8	0.88	27.2	9.6	2.5	2.3	3.1	55.4	87.1
AMHE 160L ZA	2	18.5	25	2935	60.2	90.3	91.6	91.2	0.88	33.3	9.6	2.8	2.4	3.4	59.7	97.5
AMHE 160L TA	2*	22	30	2935	71.6	91.0	91.7	91.5	0.89	38.6	9.9	3.0	2.6	3.7	64.0	108.7
AMHE 180M ZG	2	22	30	2930	71.7	90.9	91.8	91.4	0.89	39.04	7.5	2.3	2.0	2.8	98	163
AMHE 200L PG	2	30	40	2930	97.8	91.3	92.3	92.4	0.88	53.3	6.7	2.4	2.0	2.7	178	228
AMHE 200L RG	2	37	50	2930	120.6	91.6	92.9	92.8	0.90	64.0	6.3	2.3	2.0	2.7	204	242
AMHE 225M PG	2	45	60	2940	146.2	92.8	93.3	93.2	0.89	78.3	6.9	2.3	2.0	2.8	285	308
AMHE 250M PG	2	55	75	2950	178.0	92.9	93.8	93.7	0.90	94.1	8.0	2.3	1.9	2.7	411	405
AMHE 280S G	2	75	100	2960	242.0	93.2	94.5	94.1	0.90	127.8	8.0	2.2	1.9	2.7	791	542
AMHE 280M G	2	90	125	2960	290.4	93.6	94.3	94.4	0.91	151.2	7.7	2.2	1.9	2.6	907	596
AMHE 315S G	2	110	150	2970	353.7	93.7	94.6	94.8	0.90	186.0	7.7	2.0	1.8	2.3	1702	922
AMHE 315M G	2	132	180	2970	424.4	93.6	94.9	95.3	0.90	222.1	7.6	2.0	1.8	2.3	1908	1010
AMHE 315M RG	2	160	220	2970	514.5	94.1	95.2	95.3	0.91	266.3	7.8	2.0	1.8	2.3	2117	1085
AMHE 315L G	2	200	270	2975	642.0	94.1	95.3	95.4	0.90	336.2	7.9	2.0	1.8	2.3	2438	1220

* Higher output (progressive motor)

HIGH EFFICIENCY THREE-PHASE MOTORS – IE2

EFFICIENCY LEVEL ACCORDING TO IEC 60034-30;2008
EFFICIENCY TESTING METHOD IEC 60034-2-1;2007

NOMINAL FULL LOAD EFFICIENCY ACCORDING TO IE2 CODE @ 400 V - 50 HZ; IE2 CODE @ 460 V - 60 HZ AND NEMA MG 1 - TABLE 12-11 (EPACT) @ 460 V - 60 HZ

Performance data referred @ 400 V - 50 Hz. For performance data @ 460 V - 60 Hz, please consult us.

FOR MAINS VOLTAGE
400 V - 50 HZ
460 V - 60 HZ

IE2

TEMPERATURE RISE TO CLASS B

Type		kW	HP	min^{-1}	M_N Nm	IE2 η 50%	75%	100%	cos φ	I_N 400V	I_A/I_N	M_A/M_N	M_S/M_N	M_K/M_N	J 10^{-3} kgm^2	kg
1500 min^{-1} (4 poles)																
AMHE 80Z AA	4	0.75	1	1430	5.0	79.2	80.3	80.2	0.76	1.8	5.5	2.8	2.7	3.0	2.5	11.0
AMHE 90S AA	4	1.1	1.5	1430	7.3	81.4	82.7	82.5	0.77	2.5	6.1	4.0	3.9	4.1	3.73	18.0
AMHE 90L BA	4	1.5	2	1430	10.0	81.0	83.5	83.0	0.77	3.4	7.9	3.9	3.8	4.0	3.73	19.0
AMHE 100L AA	4	2.2	3	1450	14.5	84.0	85.3	85.1	0.74	5.1	6.0	3.2	3	3.4	5.58	22.4
AMHE 100L BA	4	3	4	1440	19.9	82.6	84.7	86.4	0.77	6.5	8.5	3.4	3.1	3.6	7.3	26.5
AMHE 112M AA	4	4	5.5	1450	26.3	86.0	87.3	87.1	0.78	8.5	6.1	3.1	2.8	3.3	13.3	30.4
AMHE 132S RA	4	5.5	7.5	1450	36.2	87.5	88.3	88.1	0.78	11.4	7.4	3.3	2.7	3.6	30.0	55.0
AMHE 132M TA	4	7.5	10	1450	49.4	88.5	89.4	89.2	0.74	16.4	7.4	3.0	2.4	3.3	36.0	65.0
AMHE 160M ZA	4	11	15	1460	71.9	89.4	90.3	90.1	0.82	22.0	7.9	2.3	2.1	2.9	105.0	108.0
AMHE 160L ZA	4	15	20	1460	98.1	90.6	91.2	91.0	0.84	29.0	7.4	2.5	2.2	3.1	120.7	114.0
AMHE 180M ZG	4	18.5	25	1455	121.4	90.9	91.6	91.4	0.85	34.4	7.8	2.4	2.1	3.0	156	160
AMHE 180L ZG	4	22	30	1460	143.9	91.1	92.0	91.6	0.84	41.3	7.5	2.3	2.0	3.0	175	175
AMHE 200L RG	4	30	40	1460	196.2	90.2	92.8	92.5	0.88	53.2	7.9	2.4	2.0	2.7	281	238
AMHE 225S PG	4	37	50	1470	240.4	92.3	92.9	92.8	0.83	69.3	6.7	2.4	2.0	2.7	487	305
AMHE 225M PG	4	45	60	1480	290.4	92.5	93.2	93.3	0.83	83.9	7.0	2.3	2.0	2.8	575	310
AMHE 250M PG	4	55	75	1480	354.9	93.1	94.0	93.8	0.87	97.3	7.4	2.4	1.9	2.7	728	412
AMHE 280S G	4	75	100	1480	483.9	93.2	94.5	94.4	0.90	127.4	7.5	2.2	1.9	2.6	1741	560
AMHE 280M G	4	90	125	1480	580.7	93.4	94.8	94.7	0.90	152.4	7.7	2.2	1.9	2.6	2037	665
AMHE 315S G	4	110	150	1480	709.8	93.9	95.0	94.9	0.89	188.0	7.8	2.0	1.8	2.3	4026	910
AMHE 315M G	4	132	180	1480	851.8	94.0	95.2	95.1	0.90	222.6	7.8	2.0	1.8	2.3	4387	1120
AMHE 315M RG	4	160	220	1480	1032.4	94.2	95.3	95.3	0.90	269.3	7.9	2.0	1.8	2.3	4968	1185
AMHE 315LG	4	200	270	1480	1290.5	94.3	95.4	95.4	0.90	336.2	7.7	2.0	1.8	2.3	6488	1340

HIGH EFFICIENCY THREE-PHASE MOTORS – IE2

EFFICIENCY LEVEL ACCORDING TO IEC 60034-30;2008
EFFICIENCY TESTING METHOD IEC 60034-2-1;2007

FOR MAINS VOLTAGE
400 V - 50 HZ

IE2

TEMPERATURE RISE TO CLASS B

Type		kW	HP	min^{-1}	M_N Nm	IE2 η 50%	IE2 η 75%	IE2 η 100%	cos φ	I_N 400V	I_A/I_N	M_A/M_N	M_S/M_N	M_K/M_N	J 10^{-3} kgm²	kg
1000 min^{-1} (6 poles)																
AMEE 90S AA	6	0.75	1	925	7.7	75.3	75.8	76.2	0.65	2.2	4.6	1.7	1.6	1.8	4.78	15.0
AMEE 90L BA	6	1.1	1.5	935	11.2	78.5	78.7	78.9	0.67	3.0	4.2	1.8	1.8	2.3	6.45	20.3
AMEE 100L AA	6	1.1	1.5	950	11.1	75.7	77.6	79.5	0.67	3.0	5.5	1.9	1.9	2.4	7.48	19.4
AMEE 100L BA	6	1.5	2	950	15.1	78.5	79.4	79.8	0.69	3.9	5.5	2.1	1.5	2.2	11.6	27.1
AMEE 112M AA	6	2.2	3	960	21.9	79.4	81.0	81.8	0.73	5.3	6.1	3.1	2.2	3.1	18.7	39.0
AMEE 132S YA	6	3	4	960	29.8	82.3	82.9	83.5	0.58	8.9	5.6	2.2	1.4	3.2	37.7	55.8
AMEE 132M YA	6	4	5.5	955	40.0	84.1	84.8	85.2	0.66	10.3	5.8	2.1	1.2	2.9	44.4	65.5
AMEE 132M TA	6	5.5	7.5	970	54.1	85.0	86.2	86.5	0.75	12.2	7.0	1.9	1.1	2.7	54.1	64.1
AMEE 160M YA	6	5.5	7.5	975	53.9	84.7	85.6	86.1	0.78	11.7	7.4	2.3	2.3	3.0	75.2	70.5
AMEE 160M ZA	6	7.5	10	970	73.8	85.8	87.3	87.5	0.78	15.8	7.7	3.0	2.8	3.8	103	96.6
AMEE 160L ZA	6	9.2	12.4	965	91.0	86.3	87.4	88.2	0.83	18.1	8.3	3.1	2.7	3.5	125	103
AMEE 160L TA	6	11	15	965	108.9	87.9	88.2	88.7	0.79	22.5	8.0	2.7	2.4	3.2	156	129

NOMINAL FULL LOAD EFFICIENCY ACCORDING TO IE2 CODE @ 400 V - 50 HZ; IE2 CODE @ 460 V - 60 HZ AND NEMA MG 1 - TABLE 12-11 (EPACT) @ 460 V - 60 HZ

Performance data referred @ 400 V - 50 Hz. For performance data @ 460 V - 60 Hz, please consult us.

FOR MAINS VOLTAGE
400 V - 50 HZ
460 V - 60 HZ

IE2

TEMPERATURE RISE TO CLASS B

Type		kW	HP	min^{-1}	M_N Nm	IE2 η 50%	IE2 η 75%	IE2 η 100%	cos φ	I_N 400V	I_A/I_N	M_A/M_N	M_S/M_N	M_K/M_N	J 10^{-3} kgm²	kg
1000 min^{-1} (6 poles)																
AMHE 180LZG	6	15	20	965	148.45	88.5	90.3	90.1	0.83	29.0	7.0	2.3	2.1	2.9	285	172
AMHE 200LPG	6	18.5	25	965	183.09	88.9	90.8	90.6	0.84	35.1	7.0	2.4	2.1	3.2	405	225
AMHE 200LRG	6	22	30	970	216.6	89.3	91.4	91.2	0.85	41.0	7.0	2.3	1.9	3.1	471	275
AMHE 225MPG	6	30	40	975	293.85	89.6	91.7	91.9	0.86	54.8	7.0	2.2	1.9	2.7	801	312
AMHE 250MPG	6	37	50	975	362.41	90.7	92.4	92.5	0.84	68.7	7.0	2.3	2.1	2.7	992	386
AMHE 280SG	6	45	60	980	438.52	91.6	92.9	92.9	0.85	82.3	7.0	2.3	2.0	2.8	1785	560
AMHE 280MG	6	55	75	980	536.0	92.1	93.4	93.3	0.86	98.9	7.0	2.2	1.9	2.7	2208	593
AMHE 315SG	6	75	100	985	727.16	93.1	93.8	93.8	0.87	132.7	7.0	2.1	1.9	2.5	4632	741
AMHE 315MG	6	90	125	985	872.59	93.3	94.1	94.2	0.88	156.7	7.0	2.0	1.8	2.3	5525	920
AMHE 315MRG	6	110	150	980	1071.94	93.2	94.5	94.6	0.89	188.6	6.7	2.0	1.8	2.3	6896	1243
AMHE 315LG	6	132	160	980	1286.33	93.7	94.7	94.8	0.88	228.4	6.7	2.0	1.8	2.3	8023	1428

HIGH EFFICIENCY THREE-PHASE MOTORS – IE2

EFFICIENCY LEVEL ACCORDING TO EPACT
EFFICIENCY TESTING METHOD CSA C390
VERIFIED BY UL UNDERWRITERS LABORATORIES INC.

NOMINAL FULL LOAD EFFICIENCY ACCORDING TO NEMA MG 1 - TABLE 12-11 (EPACT) AND IE2 CODE

FOR MAINS VOLTAGE
460 V - 60 HZ

IE2 ENERGY c UL us

TEMPERATURE RISE TO CLASS B
S.F. 1.15

Type		kW	HP	min^{-1}	M_N Nm	IE2 η 50%	IE2 η 75%	IE2 η 100%	cos φ	I_N 460V	I_A/I_N	M_A/M_N	M_S/M_N	M_K/M_N	J 10^{-3} kgm²	kg
3600 min^{-1} (2 poles)																
AMH 80Z AA	**2**	0.75	1	3480	2.1	77.1	81.5	83.2	0.80	1.5	9.7	4.50	4.5	4.8	1.1	9.5
AMH 80Z BA	**2**	1.1	1.5	3480	3.0	77.8	81.5	83.3	0.80	2.0	9.6	3.5	3.4	3.7	1.2	11.1
AMH 90S AA	**2**	1.5	2	3470	4.1	83.8	84.9	84.3	0.88	2.7	10.4	3.1	3	3.6	1.6	14
AMH 90L BA	**2**	2.2	3	3500	6.0	85.4	86.6	86.3	0.84	3.9	9.8	4.4	4	4.4	1.8	16
AMH 100L AA	**2**	2.2	3	3530	6.0	86.5	87.9	87.8	0.84	3.9	11.5	4.7	4.1	5.5	3.3	19.7
AMH 100L BA	**2**	3	4	3525	8.1	86.4	87.8	87.7	0.82	5.0	10.5	5.6	5.3	5.8	4.0	22.8
AMH 112M AA	**2**	3.7	5	3530	10.0	86.1	88.4	88.1	0.84	6.3	16.5	5.7	2.1	5.8	8.6	33.6
AMH 112M AA	**2**	4	5.5	3540	10.8	86.1	88.3	88.0	0.87	6.6	15.5	5.3	1.9	5.4	8.6	33.6
AMH 112M BA	**2***	5.5	7.5	3500	15.0	85.0	88.6	88.5	0.85	9.3	13.6	4.5	2.5	4.3	8.6	34
AMH 132S ZA	**2**	5.5	7.5	3520	14.9	86.1	88.2	88.5	0.87	9.2	10.9	3.3	2.9	3.7	20.5	53
AMH 132S TA	**2**	7.5	10	3510	20.4	89.7	90.1	89.5	0.91	11.0	12.9	3.4	2.9	3.9	20.5	53
AMH 132M TA	**2**	9.2	12.4	3520	25.0	88.8	89.9	89.5	0.91	14.0	12.1	3.3	2.9	3.9	25	59
AMH 160M YA	**2**	11	15	3550	29.6	90.1	91.0	91.0	0.88	17.3	13.6	2.8	2.2	3.6	51.7	87.8
AMH 160M ZA	**2**	15	20	3545	40.4	91.2	89.9	91.0	0.88	23.5	12.2	2.8	2.2	3.6	64	104
AMH 160L ZA	**2**	18.5	25	3550	49.8	91.5	92.0	91.7	0.87	28.8	12.4	2.8	2.2	3.6	64	105

* Higher output (progressive motor)

Type		kW	HP	min^{-1}	M_N Nm	IE2 η 50%	IE2 η 75%	IE2 η 100%	cos φ	I_N 460V	I_A/I_N	M_A/M_N	M_S/M_N	M_K/M_N	J 10^{-3} kgm²	kg
1800 min^{-1} (4 poles)																
AMH 80Z AA	**4**	0.75	1	1740	4.1	77.8	81.5	82.8	0.72	1.6	6.5	3.3	3.4	3.8	2.4	10.6
AMH 90L AA	**4**	1.1	1.5	1745	6.0	82.2	84.2	84.2	0.76	2.1	8	3.8	4	4.6	3.7	16.4
AMH 90L BA	**4**	1.5	2	1735	8.3	82.1	84.4	84.4	0.73	3.1	8.7	4	3.9	4.2	3.7	16.4
AMH 90L CA	**4**	1.8	2.4	1720	10.0	82.2	84.3	84.3	0.77	3.4	8.2	4.4	3.3	4	3.7	16.4
AMH 100L AA	**4**	2.2	3	1750	12.0	85.8	87.6	87.5	0.70	4.6	8.4	3.8	3.1	3.9	5.6	22.4
AMH 100L BA	**4**	3	4	1740	16.5	85.7	87.7	87.6	0.76	5.6	9.4	3	2.8	3.2	7.3	26.5
AMH 112M AA	**4**	3.7	5	1750	20.2	86.3	87.9	87.8	0.79	6.8	6.9	4.2	3.5	4.5	13.3	30.4
AMH 112M AA	**4**	4	5.5	1745	21.9	86.5	88.1	88	0.81	7.0	6.7	3.9	3.2	4.2	13.3	30.4
AMH 132S ZA	**4**	5.5	7.5	1755	29.9	88.8	89.8	89.5	0.84	9.4	8.5	3.4	2.8	3.7	30	56
AMH 132M ZA	**4**	7.5	10	1750	40.9	89.5	90.2	89.5	0.84	12.4	9.1	3.5	2.9	3.8	36	65
AMH 132M TA	**4**	9.2	12.4	1745	50.3	89.2	90.0	89.5	0.84	16.0	8.8	3.6	2.9	3.9	36	65
AMH 160M ZA	**4**	11	15	1770	59.3	90.8	91.4	91	0.84	18.5	8.9	3.2	2.3	3.4	105.7	108
AMH 160L ZA	**4**	15	20	1770	80.9	91.4	91.6	91	0.84	24.0	8.2	3.2	2.3	3.4	120.7	114

HIGH EFFICIENCY THREE-PHASE MOTORS – IE2

EFFICIENCY LEVEL ACCORDING TO EISA
EFFICIENCY TESTING METHOD CSA C390-10
VERIFIED BY UL ENVIRONMENT

NOMINAL FULL LOAD EFFICIENCY ACCORDING TO NEMA MG 1 - TABLE 12-11

FOR MAINS VOLTAGE
460 V - 60 HZ

IE2 ENERGY c UL us

TEMPERATURE RISE TO CLASS B
S.F. 1.15
IEC - DESIGN H

Type		kW	HP	min^{-1}	M_N Nm	IE2 η 50%	IE2 η 75%	IE2 η 100%	cos φ	I_N 460V	I_A/I_N	M_A/M_N	M_S/M_N	M_K/M_N	J 10^{-3} kgm²	kg
1200 min^{-1} (6 poles)																
AMH 90S AA	6	0.75	1	1145	6.3	78.6	80.5	80.0	0.60	2.0	4.3	2.6	2.3	2.8	6.0	18.1
AMH 90L BA	6	0.9	1.2	1150	7.5	76.0	80.1	80.0	0.56	2.5	5.1	3.1	2.8	3.4	6.5	19.0
AMH 100L AA	6	1.1	1.5	1180	8.9	83.0	85.2	85.5	0.52	3.1	5.8	2.4	1.9	3.9	14.2	26.0
AMH 112M AA	6	1.1	1.5	1175	8.9	84.3	85.6	85.5	0.62	2.5	6.3	3.0	2.5	3.6	12.9	26.7
AMH 112M BA	6	1.5	2	1175	12.2	85.2	86.4	86.5	0.60	3.6	6.0	2.9	2.5	3.5	15.5	29.3
AMH 112M CA	6	2.2	3	1175	17.9	85.2	87.4	87.5	0.60	5.2	6.1	2.8	2.5	3.3	20.1	34.2
AMH 132S YA	6	3	4	1175	24.4	86.2	87.4	87.5	0.64	6.6	6.0	2.3	1.7	3.2	37.7	42.0
AMH 132M YA	6	4	5.5	1170	32.6	86.5	87.6	87.5	0.61	9.2	6.1	2.3	1.7	3.2	44.4	46.0
AMH 132M TA	6	5.5	7.5	1180	44.5	88.0	89.6	89.5	0.55	14.5	6.0	2.3	1.8	3.6	54.1	48.0
AMH 160M ZA	6	7.5	10	1170	61.2	88.1	89.3	89.5	0.77	13.7	8.0	2.8	2.6	3.5	103.0	84.0
AMH 160L TA	6	11	15	1170	89.8	89.1	90.4	90.2	0.78	19.2	8.6	3.1	2.9	4.0	136.0	105.0

HIGH EFFICIENCY THREE-PHASE MOTORS – IE2

EFFICIENCY LEVEL ACCORDING TO IEC 60034-30;2008
EFFICIENCY TESTING METHOD IEC 60034-2-1;2007

FOR MAINS VOLTAGE
400 V - 50 HZ

IE2

TEMPERATURE RISE TO CLASS B

Type		kW	HP	min^{-1}	M_N Nm	IE2 η 50%	75%	100%	cos φ	I_N 400V	I_A/I_N	M_A/M_N	M_S/M_N	M_K/M_N	J 10^{-3} kgm²	kg
3000 min^{-1} (2 poles)																
AMEE 71Z AA	2*	0.75	1	2820	2.5	73.3	76.5	77.5	0.74	1.9	5.5	3.4	3.2	3.4	0.61	7.2
AMEE 80Z AA	2	0.75	1	2825	2.5	71.7	76.1	77.4	0.74	1.9	7.5	4.3	4.1	4.4	0.75	8.4
AMEE 80Z BA	2	1.1	1.5	2820	3.7	77.6	80.0	79.6	0.78	2.5	7.6	4.3	4.1	4.4	0.96	12.0
AMEE 80Z CA	2*	1.5	2	2880	5.0	80.5	82.1	82.3	0.83	3.4	7.7	4.3	4.1	4.4	1.1	13.5
AMEE 90S AA	2	1.5	2	2850	5.0	79.1	81.4	81.3	0.80	3.4	6.8	3.0	3.0	3.1	1.37	12.7
AMEE 90L CA	2	2.2	3	2870	7.3	80.5	83.2	83.6	0.81	4.7	6.8	3.0	3.0	3.2	1.8	16.0
AMEE 90L DA	2*	3	4	2870	10.0	82.4	84.5	84.6	0.79	6.6	6.8	3.4	3.4	3.9	2.1	18.7
AMEE 100L AA	2	3	4	2900	9.9	83.5	84.6	84.6	0.86	5.9	9.8	4.3	3.6	4.0	3.3	19.7
AMEE 100L BA	2*	4	5.5	2910	13.1	85.3	86.7	86.6	0.83	8.0	9.8	4.2	3.6	4.0	4.1	22.8
AMEE 112M AA	2	4	5.5	2900	13.2	82.8	85.2	85.8	0.82	8.3	9.1	3.2	3.2	3.5	12.2	29.5
AMEE 112M BA	2*	5.5	7.5	2920	18.0	85.8	87.4	87.3	0.88	10.4	8.7	3.1	2.6	3.5	8.58	34.0
AMEE 112M CA	2*	7.5	10	2900	24.7	86.5	88.3	88.3	0.92	13.2	9.6	3.4	2.8	3.7	10.5	36.0
AMEE 132S YA	2	5.5	7.5	2910	18.0	85.9	87.8	87.8	0.84	11.0	8.2	2.7	2.7	3.2	10.63	37.0
AMEE 132S ZA	2	7.5	10	2910	24.6	89.3	89.5	88.9	0.86	14.1	8.2	2.7	2.7	3.2	13.8	42.6
AMEE 132M ZA	2	9.2	12.5	2920	30.1	89.1	90.4	89.4	0.90	16.3	9.4	3.0	2.8	4.0	16.0	53.0
AMEE 132M RA	2*	11	15	2920	36.0	88.1	90.0	89.7	0.90	19.8	9.6	3.0	2.9	4.2	17.5	58.0
AMEE 132M TA	2*	15	20	2920	49.1	88.9	90.6	90.3	0.89	27.0	9.6	3.8	2.2	4.0	21.0	61.0
AMEE 160M YA	2	11	15	2935	35.8	87.7	89.4	89.6	0.81	22.0	8.6	3.6	2.8	3.1	40.0	77.0
AMEE 160M ZA	2	15	20	2930	48.9	89.9	90.8	90.3	0.89	26.7	9.2	3.5	2.6	3.3	51.8	77.0
AMEE 160L ZA	2	18.5	25	2930	60.3	89.0	90.6	90.9	0.81	36.3	8.7	3.3	3.1	3.9	53.4	88.9
AMEE 160L TA	2	22	30	2935	71.6	91.0	91.7	91.5	0.90	38.6	9.0	4.4	4.3	3.6	64.0	108.7

* Higher output (progressive motor)

HIGH EFFICIENCY THREE-PHASE MOTORS – IE2

EFFICIENCY LEVEL ACCORDING TO IEC 60034-30;2008
EFFICIENCY TESTING METHOD IEC 60034-2-1;2007

FOR MAINS VOLTAGE 400 V - 50 HZ

IE2

TEMPERATURE RISE TO CLASS B

Type		kW	HP	min^{-1}	M_N Nm	IE2 η 50%	IE2 η 75%	IE2 η 100%	cos φ	I_N 400V	I_A/I_N	M_A/M_N	M_S/M_N	M_K/M_N	J 10^{-3} kgm²	kg
1500 min^{-1} (4 poles)																
AMEE 80Z AA	**4**	0.75	1	1410	5.1	78.6	80.2	80.0	0.80	1.7	6.0	3.0	2.7	2.9	2.3	9.9
AMEE 80Z BA	**4***	1.1	1.5	1420	7.4	78.3	81.0	81.4	0.72	2.7	6.0	3.0	2.7	2.9	2.5	11.0
AMEE 90S AA	**4**	1.1	1.5	1420	7.4	78.5	81.1	81.4	0.72	2.7	7.7	3.8	3.7	3.8	2.7	11.5
AMEE 90L BA	**4**	1.5	2	1415	10.1	81.3	82.8	82.8	0.70	3.8	7.8	3.9	3.8	4.1	3.1	14.5
AMEE 90L CA	**4**	1.8	2.4	1420	12.1	84.1	84.9	84.0	0.77	4.0	7.8	3.9	3.8	4.1	3.7	16.4
AMEE 100L AA	**4**	2.2	3	1440	14.6	83.0	84.6	84.3	0.77	4.9	7.2	3.7	3.2	3.9	5.6	22.5
AMEE 100L BA	**4**	3	4	1430	20.0	83.7	84.9	85.5	0.74	6.8	7.3	3.7	3.2	3.9	6.05	25.0
AMEE 112M AA	**4**	4	5.5	1450	26.3	86.0	87.3	87.1	0.78	8.5	7.4	2.6	2.4	3.2	13.3	30.4
AMEE 112M BA	**4***	5.5	7.5	1445	36.3	86.8	88.3	88.1	0.78	11.6	8.6	2.8	2.6	3.3	17.4	38.9
AMEE 132S RA	**4**	5.5	7.5	1455	36.1	86.2	86.9	87.8	0.76	11.8	7.9	3.7	3.5	3.8	26.5	49.0
AMEE 132M TA	**4**	7.5	10	1450	49.4	87.5	88.8	88.7	0.74	16.4	7.8	3.7	3.5	3.8	36.0	65.0
AMEE 132M ZA	**4**	9.2	12.4	1450	60.6	86.9	89.2	89.3	0.77	19.5	8.1	3.6	3.5	3.9	42.0	76.0
AMEE 160M ZA	**4**	11	15	1460	71.9	89.4	90.3	90.1	0.82	22.0	7.9	3.6	2.6	2.7	105.0	108.0
AMEE 160L ZA	**4**	15	20	1460	98.1	90.6	91.2	91.0	0.84	29.0	7.9	3.6	2.6	2.7	120.7	114.0

* Higher output (progressive motor)

Type		kW	HP	min^{-1}	M_N Nm	IE2 η 50%	IE2 η 75%	IE2 η 100%	cos φ	I_N 400V	I_A/I_N	M_A/M_N	M_S/M_N	M_K/M_N	J 10^{-3} kgm²	kg
1000 min^{-1} (6 poles)																
AMEE 90S AA	**6**	0.75	1	925	7.7	75.3	75.8	76.2	0.65	2.2	4.6	1.7	1.6	1.8	4.78	15.0
AMEE 90L BA	**6**	1.1	1.5	935	11.2	78.5	78.7	78.9	0.67	3.0	4.2	1.8	1.8	2.3	6.45	20.3
AMEE 100L AA	**6**	1.1	1.5	950	11.1	75.7	77.6	79.5	0.67	3.0	5.5	1.9	1.9	2.4	7.48	19.4
AMEE 100L BA	**6**	1.5	2	950	15.1	78.5	79.4	79.8	0.69	3.9	5.5	2.1	1.5	2.2	11.6	27.1
AMEE 112M AA	**6**	2.2	3	960	21.9	79.4	81.0	81.8	0.73	5.3	6.1	3.1	2.2	3.1	18.7	39.0
AMEE 132S YA	**6**	3	4	960	29.8	82.3	82.9	83.5	0.58	8.9	5.6	2.2	1.4	3.2	37.7	55.8
AMEE 132M YA	**6**	4	5.5	955	40.0	84.1	84.8	85.2	0.66	10.3	5.8	2.1	1.2	2.9	44.4	65.5
AMEE 132M TA	**6**	5.5	7.5	970	54.1	85.0	86.2	86.5	0.75	12.2	7.0	1.9	1.1	2.7	54.1	64.1
AMEE 160M YA	**6**	5.5	7.5	975	53.9	84.7	85.6	86.1	0.78	11.7	7.4	2.3	2.3	3.0	75.2	70.5
AMEE 160M ZA	**6**	7.5	10	970	73.8	85.8	87.3	87.5	0.78	15.8	7.7	3.0	2.8	3.8	103	96.6
AMEE 160L ZA	**6**	9.2	12.4	965	91.0	86.3	87.4	88.2	0.83	18.1	8.3	3.1	2.7	3.5	125	103
AMEE 160L TA	**6**	11	15	965	108.9	87.9	88.2	88.7	0.79	22.5	8.0	2.7	2.4	3.2	156	129

STANDARD EFFICIENCY THREE-PHASE MOTORS – IE1

EFFICIENCY LEVEL ACCORDING TO IEC 60034-30;2008
EFFICIENCY TESTING METHOD IEC 60034-2-1;2007

IE code not applicable to motors 2, 4, 6 poles with PN < 0.75 kW. Efficiency testing method: IEC 60034-2;1996

FOR MAINS VOLTAGE 400 V - 50 HZ

IE1

TEMPERATURE RISE TO CLASS B

Type		kW	HP	min^{-1}	M_N Nm	IE1 η 50%	75%	100%	cos φ	I_N 400V	380-420V	I_A/I_N	M_A/M_N	M_S/M_N	M_K/M_N	J 10^{-3} kgm^2	kg
3000 min^{-1} (2 poles)																	
AM 56Z AA	**2**	0.09	0.12	2810	0.3	49.0	53.0	59.0	0.67	0.35	0.40	3.9	3.8	3.8	3.9	0.09	3.4
AM 56Z BA	**2**	0.12	0.16	2800	0.4	51.0	56.0	62.0	0.68	0.40	0.45	3.5	3.4	3.4	3.5	0.10	3.5
AM 63Z AA	**2**	0.18	0.25	2790	0.6	54	58	63.0	0.73	0.60	0.65	3.7	3.0	3.0	3.1	0.14	3.6
AM 63Z BA	**2**	0.25	0.33	2790	0.9	57	62	66.0	0.70	0.80	0.75	4.5	3.2	3.2	3.3	0.17	4.1
AM 63Z CA	**2***	0.37 [1]	0.50 [1]	2800	1.3	54	58	65.0	0.70	1.20	1.25	4.6	3.4	3.3	3.4	0.20	4.4
AM 71Z AA	**2**	0.37	0.50	2820	1.3	58.0	64.0	70.0	0.78	1.0	1.2	4.7	3.6	3.4	3.6	0.32	5.8
AM 71Z BA	**2**	0.55	0.75	2830	1.9	57.0	64.0	71.0	0.77	1.5	1.6	4.8	3.2	3.1	3.3	0.37	6.2
AM 71Z CA	**2***	0.75 [1]	1 [1]	2800	2.6	58.9	65.7	72.6	0.76	2.0	2.1	5.2	3.1	3.2	3.1	0.48	7.2
AM 80Z AA	**2**	0.75	1	2840	2.5	66.3	71.5	73.0	0.78	1.9	2.0	5.0	2.8	2.8	2.9	0.6	8.4
AM 80Z BA	**2**	1.1	1.5	2810	3.7	72.1	75.0	75.3	0.82	2.5	2.6	4.6	2.4	2.8	2.9	0.75	9.5
AM 80Z CA	**2***	1.5 [1]	2 [1]	2825	5.1	74.7	77.5	77.8	0.83	3.3	3.4	5.0	2.9	3.0	3.3	1.92	11.1
AM 90S AA	**2**	1.5	2	2830	5.1	75.6	78.7	78.6	0.82	3.4	3.5	5.0	3.1	2.9	3.0	1.23	12.7
AM 90S BA	**2***	1.8	2.5	2805	6.1	74.9	78.0	78.2	0.80	4.2	4.3	4.5	2.6	2.4	2.5	1.23	12.7
AM 90L CA	**2**	2.2	3	2860	7.3	81.5	82.8	81.8	0.81	4.9	4.9	7.1	4.1	3.6	4.0	1.68	16.0
AM 90L DA	**2***	3 [1]	4 [1]	2860	10.0	78.7	81.8	82.2	0.80	6.6	6.8	7.2	3.9	3.4	3.8	2.16	18.7
AM 100L AA	**2**	3	4	2860	10.0	78.9	81.4	81.5	0.85	6.4	6.7	6.0	3.1	3.1	3.3	2.36	19.3
AM 100L BA	**2***	4 [1]	5.5 [1]	2835	13.5	81.1	82.5	81.7	0.88	8.0	8.1	6.2	2.9	2.5	2.9	2.90	19.7
AM 100L CA	**2***	5.5 [1]	7.5 [1]	2865	18.3	83.7	84.6	83.3	0.86	11.1	11.3	7.2	3.5	3.4	4.1	3.90	25.9
AM 112M AA	**2**	4	5.5	2880	13.3	81.9	84.0	83.5	0.82	8.4	8.7	8.0	3.4	3.5	3.6	4.65	24.3
AM 112M BA	**2***	5.5	7.5	2900	18.1	83.6	84.7	85.0	0.86	10.9	11.2	7.8	3.5	3.4	3.6	5.80	27.4
AM 112M CA	**2***	7.5	10	2900	24.7	86.7	87.8	87.1	0.87	14.3	14.8	8.7	4.0	3.9	4.0	8.50	33.6
AM 132S YA	**2**	5.5	7.5	2890	18.2	83.2	84.7	85.0	0.83	11.3	11.4	6.0	2.2	2.1	2.3	9.50	37.0
AM 132S ZA	**2**	7.5	10	2880	24.9	85.6	86.7	86.1	0.87	14.5	14.9	6.4	2.9	2.7	3.1	12.30	42.6
AM 132M ZA	**2***	9.2	12.5	2900	30.3	84.7	86.8	87.0	0.84	18.4	18.8	7.0	2.8	2.4	3.2	13.20	48.0
AM 132M RA	**2***	11	15	2880	36.5	87.1	88.1	88.0	0.85	21.3	21.7	6.9	3.2	2.8	3.8	16.00	52.5
AM 132M TA	**2***	15 [1]	20 [1]	2920	49.1	86.4	88.6	88.9	0.83	29.5	30.5	7.0	3.2	2.8	3.7	21.20	59.0
AM 160M VA	**2**	11	15	2940	35.7	83.4	86.4	87.7	0.83	21.9	22.7	7.4	2.5	2.3	3.1	33.10	77.0
AM 160M XA	**2**	15	20	2940	48.7	87.3	88.9	88.9	0.85	28.6	29.2	8.1	3.1	2.6	3.7	43.90	94.0
AM 160L XA	**2**	18.5	25	2950	59.9	88.2	89.7	89.6	0.87	34.3	34.8	8.5	3.6	3.0	4.2	57.00	107.8
AM 160L RA	**2***	22	30	2940	71.5	88.7	90.5	90.4	0.90	39.1	39.4	8.4	3.0	2.6	3.7	57.00	108.7

1) Temperature rise to class F
* Higher output (progressive motor)

STANDARD EFFICIENCY THREE-PHASE MOTORS – IE1

EFFICIENCY LEVEL ACCORDING TO IEC 60034-30;2008
EFFICIENCY TESTING METHOD IEC 60034-2-1;2007

IE code not applicable to motors 2, 4, 6 poles with PN < 0.75 kW. Efficiency testing method: IEC 60034-2;1996

FOR MAINS VOLTAGE 400 V - 50 HZ

IE1

TEMPERATURE RISE TO CLASS B

Type		kW	HP	min^{-1}	M_N Nm	IE1 η 50%	75%	100%	cos φ	I_N 400V	380-420V	I_A/I_N	M_A/M_N	M_S/M_N	M_K/M_N	J 10^{-3} kgm^2	kg
1500 min^{-1} (4 poles)																	
AM 56Z AA	**4**	0.06	0.08	1300	0.4	42.0	44.0	48.0	0.70	0.28	0.32	2.6	2.1	2.0	2.1	0.14	2.7
AM 56Z BA	**4**	0.09	0.12	1330	0.6	43.0	47.0	51.0	0.74	0.35	0.40	2.5	2.2	2.1	2.2	0.16	2.9
AM 63Z AA	**4**	0.12	0.16	1350	0.8	46.0	50.0	57.0	0.65	0.50	0.55	2.4	2.0	1.9	2.0	0.25	3.3
AM 63Z BA	**4**	0.18	0.25	1330	1.3	47.0	50.0	58.0	0.70	0.65	0.70	2.3	1.9	1.8	1.9	0.27	4.1
AM 63Z CA	**4***	0.25	0.33	1360	1.8	49.0	52.5	58.0	0.74	0.85	0.90	2.7	2.2	2.0	2.1	0.30	4.2
AM 71Z AA	**4**	0.25	0.33	1340	1.8	55.0	59.0	64.0	0.66	0.90	1.00	3.2	1.9	1.8	2.0	0.65	5.7
AM 71Z BA	**4**	0.37	0.50	1370	2.6	60.0	63.0	67.0	0.67	1.20	1.25	3.3	2.2	2.1	2.2	0.76	6.0
AM 71Z CA	**4***	0.55 [1]	0.75 [1]	1380	3.8	61.0	64.0	69.0	0.68	1.70	1.80	3.6	2.4	2.3	2.4	1.00	7.3
AM 80Z AA	**4**	0.55	0.75	1400	3.8	67.0	69.0	70.0	0.72	1.6	1.7	3.6	2.6	2.5	2.6	1.38	8.2
AM 80Z BA	**4**	0.75	1	1410	5.1	68.7	70.8	72.4	0.72	2.1	2.2	4.4	2.8	2.3	2.8	1.78	9.3
AM 80Z CA	**4***	1.1 [1]	1.5 [1]	1385	7.6	73.4	75.7	75.2	0.77	2.8	2.9	4.4	2.5	2.5	2.6	2.18	10.6
AM 90S AA	**4**	1.1	1.5	1400	7.5	75.8	76.0	75.4	0.78	2.7	2.9	5.2	2.5	2.4	2.8	2.20	12.5
AM 90L BA	**4**	1.5	2	1400	10.2	77.6	77.8	77.5	0.78	3.6	3.7	5.7	2.8	2.6	3.0	2.80	14.5
AM 90L CA	**4**	1.8 [1]	2.5 [1]	1380	12.5	76.3	76.5	75.9	0.81	4.2	4.3	5.5	2.7	2.5	2.9	3.35	14.5
AM 90L DA	**4***	2.2 [1]	3 [1]	1400	15.0	78.3	78.5	77.9	0.77	5.3	5.5	4.8	2.9	2.8	3.2	3.65	17.0
AM 100L AA	**4**	2.2	3	1435	14.6	76.5	79.1	79.9	0.74	5.4	5.6	5.3	2.5	2.4	2.7	4.50	19.5
AM 100L BA	**4**	3	4	1425	20.1	82.0	83.0	81.6	0.78	6.8	6.9	4.6	2.4	2.3	2.5	5.75	22.5
AM 100L CA	**4***	4 [1]	5.5 [1]	1400	27.3	80.8	81.8	80.4	0.78	9.2	9.3	6.0	2.6	2.4	2.9	6.30	25.0
AM 112M AA	**4**	4	5.5	1430	26.7	83.2	83.9	83.1	0.82	8.5	8.8	6.3	2.2	2.0	2.8	10.70	29.5
AM 112M BA	**4***	5.5 [1]	7.5 [1]	1430	36.7	84.1	84.8	84.0	0.83	11.4	11.7	6.5	2.2	2.0	2.9	13.50	34.0
AM 132S ZA	**4**	5.5	7.5	1430	36.7	87.2	87.1	86.1	0.82	11.3	11.7	5.8	3.0	2.7	3.0	21.20	41.9
AM 132M ZA	**4**	7.5	10	1440	49.7	87.3	87.2	86.2	0.83	15.3	15.5	6.8	3.1	2.7	3.1	27.80	51.0
AM 132M RA	**4**	9.2	12.5	1440	61.0	86.5	87.5	87.3	0.86	17.7	17.9	8.0	3.5	3.2	3.5	31.50	65.0
AM 132M TA	**4***	11.0 [1]	15 [1]	1440	72.9	83.5	83.9	84.5	0.87	21.5	22.0	8.3	3.1	3.0	3.3	31.50	65.0
AM 160M XA	**4**	11	15	1460	71.9	88.5	89.3	88.7	0.80	22.4	22.7	7.5	2.5	2.2	3.1	66.8	88.5
AM 160L XA	**4**	15	20	1460	98.1	89.4	90.2	89.6	0.84	28.8	29.6	7.0	2.5	2.2	3.3	87.8	106.5
AM 160L ZA	**4***	18.5	25	1460	121.8	89.9	90.7	90.1	0.84	35.4	36	7.6	2.5	2.2	3.3	100.50	117.3
AM 160L RA	**4***	22	30	1460	143.9	90.4	91.2	90.6	0.86	41.0	42	7.8	2.4	2.2	3.2	112.50	128.1

1) Temperature rise to class F
* Higher output (progressive motor)

STANDARD EFFICIENCY THREE-PHASE MOTORS – IE1

EFFICIENCY LEVEL ACCORDING TO IEC 60034-30;2008
EFFICIENCY TESTING METHOD IEC 60034-2-1;2007

IE code not applicable to motors 2, 4, 6 poles with PN < 0.75 kW. Efficiency testing method: IEC 60034-2;1996

FOR MAINS VOLTAGE 400 V - 50 HZ

IE1

TEMPERATURE RISE TO CLASS B

Type		kW	HP	min^{-1}	M_N Nm	IE1 η 50%	75%	100%	cos φ	I_N 400V	380-420V	I_A/I_N	M_A/M_N	M_S/M_N	M_K/M_N	J 10^{-3} kgm^2	kg
1000 min^{-1} (6 poles)																	
AM 71Z AA	**6**	0.18	0.25	880	2.0	46.0	48.0	53.0	0.60	0.85	0.9	2.2	1.6	1.5	1.6	1.00	6.1
AM 71Z BA	**6**	0.25 1)	0.33 1)	880	2.7	46.0	50.0	54.0	0.62	1.10	1.2	2.5	1.7	1.6	1.7	1.19	6.6
AM 80Z AA	**6**	0.37	0.5	920	3.8	47.0	58.0	60.0	0.70	1.25	1.3	2.7	1.6	1.6	2.1	1.83	8.0
AM 80Z BA	**6**	0.55	0.75	920	5.7	60.0	64.0	68.0	0.67	1.75	1.8	2.9	2.2	2.1	2.1	2.36	9.4
AM 90S AA	**6**	0.75	1	910	7.9	70.5	72.5	71.5	0.63	2.4	2.5	2.9	1.7	1.5	1.7	2.90	11.6
AM 90L BA	**6**	1.1	1.5	920	11.4	72.0	73.5	73.0	0.66	3.3	3.4	3.0	1.7	1.5	1.7	4.38	15.0
AM 100L AA	**6**	1.5	2	930	15.4	73.3	75.8	75.3	0.69	4.2	4.4	3.7	1.8	1.8	2.3	6.35	17.5
AM 100L BA	**6**	1.8	2.5	940	18.3	74.6	77.1	76.6	0.67	5.1	5.3	4.2	2.4	2.4	2.8	9.00	22.0
AM 112M AA	**6**	2.2	3	940	22.4	77.0	79.0	78.0	0.74	5.3	5.4	4.4	2.4	2.4	2.6	12.85	26.0
AM 112M CA	**6***	3	4	940	30.5	81.8	82.8	82.8	0.74	7.0	7.2	5.3	2.9	2.9	2.9	17.90	39.0
AM 132S ZA	**6**	3	4	950	30.2	79.5	81.5	81.3	0.72	7.4	7.5	4.9	2.0	1.8	2.4	21.40	36.7
AM 132M YA	**6**	4	5.5	950	40.2	81.4	83.1	82.7	0.71	9.9	10.5	4.5	2.2	2.0	2.5	28.90	42.5
AM 132M ZA	**6**	5.5	7.5	950	55.3	82.2	83.6	83.6	0.71	13.5	13.5	4.1	2.2	1.9	2.2	37.40	55.5
AM 132M TA	**6***	7.5 1)	10 1)	960	74.6	82.8	83.5	82.9	0.75	17.4	17.6	5.0	2.3	1.9	2.8	46.70	64.1
AM 160M ZA	**6**	7.5	10	970	73.8	84.4	86.5	86.3	0.78	16.0	16.3	6.2	2.8	2.7	3.2	103	96.6
AM 160L ZA	**6**	11	15	960	109.4	88.1	88.5	87.8	0.78	23.4	24.0	6.0	2.5	2.2	3.5	136	113.6

1) Temperature rise to class F
* Higher output (progressive motor)

EFFICIENCY TESTING METHOD IEC 60034-2-1;1996

Type		kW	HP	min^{-1}	M_N Nm	η 50%	75%	100%	cos φ	I_N 400V	380-420V	I_A/I_N	M_A/M_N	M_S/M_N	M_K/M_N	J 10^{-3} kgm^2	kg
750 min-1 (8 poles)																	
AM 71Z AA	**8**	0.12	0.16	670	1.7	40	44	50	0.55	0.65	0.7	2.4	2.5	2.4	2.5	0.76	6.0
AM 80Z AA	**8**	0.25	0.33	680	3.5	40	47	51	0.62	1.1	1.2	2.2	1.8	1.9	2.0	1.83	8.0
AM 90S AA	**8**	0.37	0.5	680	5.2	52	58	59	0.53	1.7	1.8	2.1	1.4	1.3	1.6	2.91	11.4
AM 90L BA	**8**	0.55	0.75	680	7.7	52	58	59	0.54	2.5	2.7	2.1	1.4	1.3	1.6	4.40	15.0
AM 100L AA	**8**	0.75	1	690	10.4	59	64	65	0.65	2.6	2.8	3.0	1.6	1.5	1.7	6.35	17.6
AM 100L BA	**8**	1.1	1.5	690	15.2	59	67	68	0.62	3.9	4.0	3.0	1.9	1.3	1.6	9.00	22.6
AM 112M AA	**8**	1.5	2	696	20.6	66	69	70	0.66	4.6	4.8	4.0	1.8	2.0	2.4	15.35	35.0
AM 132S ZA	**8**	2.2	3	710	29.6	79.3	80.5	78.8	0.64	6.4	6.6	3.4	1.7	1.6	1.7	28.90	45.5
AM 132M ZA	**8**	3	4	710	40.4	81.3	82.0	79.8	0.67	8.1	9.2	3.6	1.7	1.6	1.9	37.40	54.5
AM 160M YA	**8**	4	5.5	700	54.6	84.9	84.5	84.4	0.72	9.5	9.7	4.5	1.8	1.6	2.2	76.70	75.0
AM 160M ZA	**8**	5.5	7.5	720	72.9	85.6	85.2	85.0	0.73	12.8	13.3	4.0	1.8	1.6	2.3	103.70	92.0
AM 160L ZA	**8**	7.5	10	710	100.9	86.3	85.8	85.5	0.74	17.1	17.8	4.0	1.8	1.6	2.3	136.00	113

THREE-PHASE TWO SPEED MOTORS

DESIGNED FOR RANGE
OF RATED VOLTAGE
380-420 V ± 5% - 50 HZ

FOR MAINS VOLTAGE
400 V - 50 HZ

TEMPERATURE RISE TO CLASS B

Type		kW	HP	min^{-1}	M_N Nm	η 100%	cos φ	I_N 400V	I_N 380-420V	I_A/I_N	M_A/M_N	J 10^{-3} kgm²	kg
1500/3000 min^{-1} (4/2 poles) - Dahlander connection Δ/YY													
AM 63Z AA	**4/2**	0.20/0.30	0.27/0.40	1345/2700	1.4/1.1	56/65	0.65/0.81	0.8/0.83	0.89/0.88	2.4/3.2	2.1/2.1	0.40	4.6
AM 71Z AA	**4/2**	0.30/0.45	0.40/0.65	1374/2830	2.1/1.5	61/66	0.78/0.73	1.0/1.35	1.2/1.5	3.3/3.0	2.3/2.1	0.76	6.3
AM 80Z AA	**4/2**	0.45/0.60	0.65/0.80	1390/2760	3.1/2.1	64/68.8	0.75/0.80	1.4/1.6	1.5/1.7	3.8/4.0	2.3/2.2	1.58	8.3
AM 80Z BA	**4/2**	0.55/0.75	0.75/1.0	1435/2850	3.7/2.5	70/71.2	0.67/0.77	1.7/2.0	1.8/2.1	4.5/5.0	2.6/2.8	2.00	11.5
AM 80Z CA	**4/2**	0.8/1.1	1.1/1.5	1425/2830	5.4/3.7	76.1/77.2	0.70/0.79	2.2/2.6	2.5/2.8	4.5/4.9	2.5/2.7	2.41	14.7
AM 90L AA	**4/2**	1.2/1.55	1.6/2.1	1435/2850	8/5.2	77.4/78.3	0.71/0.79	3.2/3.7	3.4/3.9	4.7/5.1	2.6/2.7	3.10	15.6
AM 90L BA	**4/2**	1.6/2.0 [1]	2.15/2.7 [1]	1390/2810	11/6.8	73.5/75.5	0.78/0.86	4.0/4.6	4.1/4.7	4.1/5.5	2.7/2.6	3.73	17.1
AM 100L AA	**4/2**	1.8/2.5	2.5/3.35	1420/2865	12.1/8.3	78.5/77.4	0.76/0.84	4.5/5.6	4.7/5.8	5.2/5.5	2.2/2.2	4.60	21.4
AM 100L BA	**4/2**	2.2/3.0	3.0/4.0	1410/2830	14.9/10.1	74.6/71.4	0.72/0.82	5.9/7.4	6.1/7.7	4.2/4.3	1.8/2.0	4.60	22.5
AM 100L CA	**4/2**	2.6/3.3	3.5/4.4	1430/2890	17.4/10.9	82.6/78.6	0.78/0.76	5.9/8.0	6.1/8.5	4.7/5.5	1.9/2.2	5.58	23.2
AM 112M AA	**4/2**	3.3/4.4	4.4/5.9	1410/2800	22.4/15	77.4/75.4	0.82/0.85	7.5/9.9	7.8/10.6	4.5/5.1	2.1/2.4	13.30	36.1
AM 132S ZA	**4/2**	4.4/5.5	6.0/7.5	1450/2925	29/18	83.0/84.6	0.70/0.87	11.0/10.8	12.0/11.8	4.4/7.2	2.2/2.7	13.83	42.6
AM 132M ZA	**4/2**	6.6/8.1	9.0/11.0	1460/2920	43.2/26.5	85.4/84.5	0.76/0.90	14.7/15.4	15.5/16.4	5.5/7.5	2.6/2.9	17.13	51.4
AM 160M ZA	**4/2**	8.8/11.0	12.0/15.0	1460/2940	57.6/35.7	87.1/87.5	0.79/0.91	18.5/20.0	19.0/21.0	5.5/7.5	2.0/1.9	51.75	94.0
AM 160L ZA	**4/2**	12.5/15.0	17.0/20.4	1470/2955	81.2/48.5	89.4/90.0	0.74/0.90	27.4/26.8	29.0/28.2	4.8/7.4	2.1/2.3	64.00	108.7

Type		kW	HP	min^{-1}	M_N Nm	η 100%	cos φ	I_N 400V	I_N 380-420V	I_A/I_N	M_A/M_N	J 10^{-3} kgm²	kg
750/1500 min^{-1} (8/4 poles) - Dahlander connection Δ/YY													
AM 71Z AA	**8/4**	0.09/0.15	0.12/0.20	610/1310	1.4/1.1	40/56	0.61/0.75	0.53/0.52	0.59/0.57	2.5/3.2	1.6/1.6	0.71	6.3
AM 80Z AA	**8/4**	0.18/0.37	0.25/0.50	700/1370	2.5/2.6	43.2/58.7	0.63/0.83	1.0/1.1	1.1/1.2	2.6/3.4	1.8/1.6	1.97	7.9
AM 80Z BA	**8/4**	0.26/0.51	0.35/0.68	700/1360	3.5/3.6	44.1/61.2	0.60/0.88	1.2/1.4	1.3/1.5	2.5/3.6	2.0/1.6	2.47	9.2
AM 90S AA	**8/4**	0.37/0.75	0.50/1.0	690/1385	5.1/5.2	52.2/67.1	0.58/0.82	1.8/2.0	1.9/2.1	2.8/3.9	1.9/1.8	3.18	13.5
AM 90L BA	**8/4**	0.5/1.0	0.67/1.34	690/1410	6.9/6.8	52.2/72.5	0.58/0.80	2.4/2.4	2.5/2.5	3.3/4.0	2.3/1.9	4.78	15.7
AM 100L AA	**8/4**	0.7/1.4	0.94/1.9	700/1440	9.5/9.3	57.2/78.5	0.50/0.78	3.5/3.3	3.7/3.4	2.8/4.3	2.1/1.9	5.58	21.9
AM 100L BA	**8/4**	0.9/1.8 [1]	1.2/2.5 [1]	690/1415	12.5/12.1	62/76	0.56/0.87	3.8/4.0	4.0/4.3	2.5/4.5	1.9/1.8	6.00	23.7
AM 112M AA	**8/4**	1/1.8	1.34/2.5	710/1445	13.5/11.9	66.1/78.5	0.61/0.82	4.1/4.1	4.4/4.2	3.9/6.3	2.2/2.1	14.18	31.7
AM 112M BA	**8/4**	1.3/2.6 [1]	1.75/3.0 [1]	705/1420	17.6/17.5	70.0/76.3	0.65/0.88	4.6/5.7	4.8/5.9	3.2/4.8	2.1/2.0	16.70	34.2
AM 132S ZA	**8/4**	2.1/3.7	2.9/5.0	710/1440	28.2/24.5	70.2/76.1	0.66/0.84	6.5/8.4	6.7/8.6	4.0/5.2	1.9/1.7	29.50	42.5
AM 132M ZA	**8/4**	2.6/4.8	3.5/6.5	715/1450	34.7/31.6	71.6/78.8	0.60/0.80	8.8/11.0	9.8/12.0	4.3/5.5	2.3/1.8	37.75	55.5
AM 160M YA	**8/4**	4.0/6.3	5.5/8.6	710/1410	53.8/42.7	80.0/81.0	0.64/0.88	11.3/12.8	12.3/13.5	4.6/6.5	1.8/ 1.7	81.25	88.5
AM 160L YA	**8/4**	4.8/7.5	6.5/10.0	730/1470	62.8/48.7	80.0/85.0	0.65/0.85	13.2/15.0	14.0/16.0	4.5/6.5	1.8/1.6	105.75	106.5
AM 160L ZA	**8/4**	5.9/10.3	8.0/14.0	725/1450	77.7/67.8	81.0/87.0	0.66/0.88	16.1/19.5	17.0/20.4	5.0/6.0	1.9/1.6	127.50	110.5

1) Temperature rise to class F

THREE-PHASE TWO SPEED MOTORS

DESIGNED FOR RANGE
OF RATED VOLTAGE
380-420 V ± 5% - 50 HZ

FOR MAINS VOLTAGE
400 V - 50 HZ

TEMPERATURE RISE TO CLASS B

Type		kW	HP	min^{-1}	M_N Nm	η 100%	cos φ	I_N 400V	I_N 380-420V	I_A/I_N	M_A/M_N	J 10^{-3} kgm^2	kg
1500/1000 min^{-1} (4/6 poles) - separate windings													
AM 71Z AA	**4/6**	0.22/0.15	0.30/0.20	1430/900	1.5/1.6	61/44	0.7/0.64	0.78/0.68	0.83/0.73	1.9/3.4	1.5/1.8	0.73	6.2
AM 80Z AA	**4/6**	0.37/0.26	0.50/0.35	1385/905	2.6/2.7	61.4/48.1	0.82/0.80	1.1/1.0	1.1/1.1	3.7/2.6	1.7/1.3	1.97	8.3
AM 80Z BA	**4/6**	0.55/0.37	0.75/0.50	1380/900	3.8/3.9	60.5/51.1	0.64/0.82	1.5/1.3	1.6/1.4	3.7/2.7	1.6/1.2	2.47	10.0
AM 90S AA	**4/6**	0.75/0.5	1.0/0.67	1400/930	5.1/5.1	63/64	0.81/0.61	2.2/1.9	2.3/2.1	3.0/3.5	1.4/1.8	4.10	13.4
AM 90L BA	**4/6**	1/0.65	1.34/0.87	1380/920	6.9/6.7	68.8/67.1	0.81/0.62	2.6/2.3	2.8/2.5	2.9/3.4	1.1/1.6	4.78	16.4
AM 100L AA	**4/6**	1.2/0.8	1.6/1.07	1460/940	7.8/8.1	76.0/67.9	0.66/0.70	3.5/2.5	3.8/2.6	4.7/3.0	2.1/1.5	4.60	24.4
AM 100L BA	**4/6**	1.6/1.0	2.15/1.34	1445/935	10.6/10.2	77.6/69.5	0.73/0.63	4.1/3.3	4.3/3.5	5.8/3.0	2.8/1.7	5.58	33.2
AM 112M AA	**4/6**	1.8/1.3	2.5/1.75	1445/950	11.9/13.1	74.6/69.5	0.85/0.78	4.2/3.6	4.4/3.7	5.9/3.8	1.9/1.3	14.18	33.3
AM 112M BA	**4/6**	2.6/1.85	3.5/2.5	1445/950	17.2/18.6	73.8/71.6	0.86/0.73	6.0/5.2	6.2/5.4	6.1/4.4	2.0/1.7	17.53	37.0
AM 132S ZA	**4/6**	3.1/2.2	4.2/3.0	1440/965	20.6/21.8	80/78	0.80/0.74	7/5.5	7.5/6	5.8/5.6	2.1/2.0	22.4	41.9
AM 132M ZA	**4/6**	4.0/2.6	5.5/3.5	1470/975	26/25.5	81.0/79.3	0.83/0.74	8.6/6.4	9.3/7.0	7.7/5.2	2.0/1.9	29.25	51.0
AM 160M YA	**4/6**	5.5/3.7	7.5/5.0	1480/970	35.5/36.4	84.0/81.4	0.79/0.73	12.0/9.0	12.9/9.6	7.5/4.5	2.5/1.6	81.25	88.5
AM 160M ZA	**4/6**	7.5/4.8	10.2/6.5	1465/960	48.9/47.7	85.0/82.6	0.83/0.75	15..4/11.2	15.8/11.5	7.4/4.6	2.4/1.6	81.25	88.5
AM 160L ZA	**4/6**	11.0/6.6	15.0/9.0	1470/960	71.5/65.7	86.0/83.8	0.86/0.75	21.6/15.2	22.5/16.0	7.2/5.0	2.3/1.8	105.75	106.5

Type		kW	HP	min^{-1}	M_N Nm	η 100%	cos φ	I_N 400V	I_N 380-420V	I_A/I_N	M_A/M_N	J 10^{-3} kgm^2	kg
1000/750 min^{-1} (6/8 poles) - separate windings													
AM 80Z AA	**6/8**	0.37/0.18	0.50/0.25	915/700	3.9/2.5	51.1/44.2	0.81/0.65	1.3/1.0	1.4/1.0	2.8/2.5	1.4/1.7	2.47	9.5
AM 90L AA	**6/8**	0.55/0.30	0.75/0.40	950/710	5.5/4	65.2/45.1	0.62/0.52	2.0/1.8	2.1/1.9	3.9/2.6	2.5/1.9	4.78	16.2
AM 100L AA	**6/8**	0.75/0.45	1.0/0.60	960/720	7.5/6	72.6/61.8	0.67/0.54	2.2/2.0	2.3/2.1	4.1/2.9	1.9/1.9	6.73	23.4
AM 112M AA	**6/8**	0.95/0.65	1.3/0.90	965/715	9.4/8.7	65.2/62.1	0.78/0.70	3.0/2.2	3.2/2.3	4.5/3.8	1.4/1.7	14.18	32.0
AM 112M BA	**6/8**	1.5/0.75	2.0/1.0	970/720	14.8/9.9	75.3/64.6	0.66/0.60	4.4/2.8	4.6/3.0	4.6/3.8	2.2/2.1	18.70	36.2
AM 132S ZA	**6/8**	2.2/1.2	3.0/1.6	970/730	21.7/15.7	73.5/66.0	0.69/0.60	6.3/4.4	6.6/4.8	4.5/3.7	1.6/1.7	29.5	42.5
AM 132M ZA	**6/8**	3.0/1.7	4.1/2.3	980/730	29.2/22.2	78.2/72.5	0.72/0.64	7.7/5.3	8.2/5.9	5.4/4.3	1.7/1.7	37.75	55.5
AM 160M YA	**6/8**	4.8/2.6	6.5/3.5	970/730	47.3/34	83.0/74.0	0.80/0.70	10.5/7.3	11.0/7.7	4.8/3.6	1.9/1.8	112.7	88.0
AM 160M ZA	**6/8**	5.9/3.3	8.0/4.5	970/730	58.1/43.2	83.2/73.0	0.76/0.60	13.5/10.9	14.5/11.4	6.5/5.0	2.2/2.1	150.25	97.5

THREE-PHASE TWO SPEED MOTORS FOR CENTRIFUGAL MACHINES

DESIGNED FOR RANGE
OF RATED VOLTAGE
380-420 V ± 5% - 50 HZ

FOR MAINS VOLTAGE
400 V - 50 HZ

TEMPERATURE RISE TO CLASS B

Type		kW	HP	min^{-1}	M_N Nm	η 100%	cos φ	I_N 400V	I_N 380-420V	I_A/I_N	M_A/M_N	J 10^{-3} kgm²	kg
1500/3000 min^{-1} (4/2 poles) - Dahlander connection Y/YY													
AMV 63Z AA	**4/2**	0.07/0.33	0.095/0.45	1350/2700	0.5/1.2	55/60	0.70/0.80	0.25/0.95	0.27/1.1	2.5/2.6	1.8/1.6	0.37	5.0
AMV 71Z AA	**4/2**	0.08/0.37	0.11/0.5	1350/2870	0.6/1.2	60/64	0.65/0.68	0.30/1.3	0.35/1.4	3.2/4.3	2.0/2.8	0.82	7.9
AMV 71Z BA	**4/2**	0.12/0.55	0.16/0.75	1430/2835	0.8/1.9	70/68	0.65/0.72	0.40/1.6	0.42/1.7	4.1/4.0	3/2.8	1.08	10.0
AMV 80Z AA	**4/2**	0.15/0.75	0.2/1.0	1400/2710	1/2.6	70/68	0.68/0.80	0.45/1.9	0.45/2.0	2.6/4.6	2.8/2.9	1.58	8.3
AMV 80Z BA	**4/2**	0.22/1.1	0.3/1.5	1420/2820	1.5/3.7	70/73	0.75/0.84	0.6/2.5	0.65/2.6	4.6/4.7	2.7/2.9	2.0	11.5
AMV 90L AA	**4/2**	0.30/1.5	0.4/2.0	1400/2830	2/5.1	69/70	0.70/0.84	0.9/3.5	1.0/3.7	4.7/5.0	2.7/3.0	3.13	15.6
AMV 90L BA	**4/2**	0.44/2.2	0.6/3.0	1430/2830	2.9/7.4	74/72	0.76/0.89	1.1/4.8	1.2/5.0	4.5/5.2	2.6/2.8	3.73	17.1
AMV 100L AA	**4/2**	0.50/2.5	0.67/3.3	1430/2840	3.3/8.4	72/73	0.77/0.88	1.3/5.3	1.4/5.6	4.6/5.0	2.2/2.3	4.6	21.4
AMV 100L BA	**4/2**	0.60/3.0	0.8/4.0	1440/2850	4/10.1	78/77	0.79/0.87	1.3/6.2	1.4/6.5	4.5/4.5	2.2/2.1	5.58	23.2
AMV 112M AA	**4/2**	0.75/3.70	1.0/5.0	1440/2850	5/12.4	74/72	0.80/0.90	1.7/7.9	1.9/2.2	4.5/5.1	2.0/2.4	13.3	36.1
AMV 112M BA	**4/2**	0.9/4.5	1.2/6.1	1440/2850	6/15.1	75/73	0.82/0.90	2.0/9.5	2.1/9.8	4.5/5.5	2.0/2.3	14.75	40.0
AMV 132S AA	**4/2**	1.1/5.5	1.5/7.5	1440/2880	7.3/18.2	81.5/84.8	0.78/0.90	2.5/10.4	2.6/11.0	5.0/6.0	2.1/2.8	13.83	42.6
AMV 132S BA	**4/2**	1.5/7 [1]	2/9.5 [1]	1440/2900	9.9/23.1	82.0/86.0	0.78/0.92	3.4/12.8	3.8/13.0	5.3/6.5	2.2/2.9	13.83	42.6
AMV 132M CA	**4/2**	1.9/8.0	2.6/10.9	1450/2930	12.5/26.1	83.7/88.0	0.82/0.87	4.0/15.1	4.0/16.0	5.5/7.0	2.2/3.0	17.13	51.4
AMV 160M AA	**4/2**	2.8/11	3.8/15.0	1440/2940	18.6/35.7	82.5/88.2	0.78/0.90	6.3/20.0	7.0/20.4	5.0/7.5	2.0/2.1	51.75	94
AMV 160M BA	**4/2**	3.3/13.5 [1]	4.5/18.3 [1]	1440/2920	21.9/44.2	83.0/88.5	0.80/0.92	7.2/24.0	7.5/24.0	5.5/7.5	2.0/2.2	51.75	94
AMV 160L CA	**4/2**	4.4/18.5 [1]	6.0/25.1 [1]	1450/2940	29/60.1	85.5/89.5	0.83/0.92	9.0/32.5	9.5/33.0	5.5/7.5	2.0/2.2	64.0	108.7

Type		kW	HP	min^{-1}	M_N Nm	η 100%	cos φ	I_N 400V	I_N 380-420V	I_A/I_N	M_A/M_N	J 10^{-3} kgm²	kg
750/1500 min^{-1} (8/4 poles) - Dahlander connection Y/YY													
AMV 71Z AA	**8/4**	0.08/0.37	0.11/0.5	660/1370	1.2/2.6	26/57	0.63/0.72	0.60/1.25	0.65/1.35	2.8/3.4	1.9/1.7	1.24	6.8
AMV 80Z AA	**8/4**	0.12/0.55	0.16/0.75	685/1420	1.7/3.7	50/69	0.60/0.74	0.58/1.53	0.65/1.6	1.9/3.3	1.4/1.5	2.47	9.2
AMV 80Z BA	**8/4**	0.18/0.75	0.25/1.0	660/1380	2.6/5.2	53/67	0.73/0.81	0.65/1.9	0.7/2.0	2.0/3.5	1.6/1.7	2.41	10.6
AMV 90L AA	**8/4**	0.18/1.1	0.25/1.5	680/1400	2.5/7.5	60/70	0.65/0.82	0.9/2.7	1.0/2.8	2.8/4.0	1.5/2.0	2.98	15.7
AMV 90L CA	**8/4**	0.4/1.6	0.54/2.15	675/1400	5.7/10.9	61.5/75	0.64/0.79	1.8/4.0	1.8/4.1	3.1/5.0	1.6/2.2	3.70	19.6
AMV 100L AA	**8/4**	0.45/2.2	0.60/3.0	680/1420	6.3/14.8	63.1/75.3	0.60/0.80	1.7/5.0	1.9/5.3	2.7/4.7	1.7/2.0	5.58	21.9
AMV 100L BA	**8/4**	0.6/2.6	0.80/3.5	680/1435	8.4/17.3	64.0/76.2	0.63/0.75	2.2/6.5	2.3/6.7	2.7/4.8	1.7/2.2	6.00	23.7
AMV 112M AA	**8/4**	0.7/3.3	0.94/4.5	690/1420	9.7/22.2	62/78	0.70/0.80	2.2/7.4	2.3/7.6	3.4/6.5	1.8/2.4	16.70	34.2
AMV 112M CA	**8/4**	1.0/4.0	1.34/5.5	720/1420	13.3/26.9	60/77	0.70/0.82	3.1/8.6	3.3/9.0	3.5/5.0	2.3/1.9	19.50	40.0
AMV 132S AA	**8/4**	1.1/4.5	1.5/6.1	725/1450	14.5/29.6	77.0/85.5	0.58/0.82	3.6/9.3	4.0/9.7	3.5/5.4	2.2/2.7	22.4	41.9
AMV 132M BA	**8/4**	1.4/5.5	1.9/7.5	720/1440	18.6/36.5	78.0/86.0	0.62/0.82	4.2/11.3	4.5/12	3.6/5.5	2.0/2.5	29.25	51.0
AMV 132M CA	**8/4**	1.8/7.5	2.4/10.2	720/1450	23.9/49.4	78.2/86.5	0.64/0.86	5.2/14.6	5.5/15.0	4.6/6.0	2.0/2.5	37.25	65.0
AMV 160M ZA	**8/4**	2.2/10.0	3.0/13.0	720/1450	29.2/65.9	80.0/88.0	0.61/0.83	6.6/19.9	6.8/20.4	3.5/6.0	1.8/1.7	81.25	88.5
AMV 160L ZA	**8/4**	3.2/15.0 [1]	4.3/20.0 [1]	720/1450	42.4/98.8	81.0/90.0	0.61/0.88	9.4/27.3	9.8/28	3.5/6.5	1.7/1.8	105.75	106.5

1) Temperature rise to class F

THREE-PHASE TWO SPEED MOTORS FOR CENTRIFUGAL MACHINES

DESIGNED FOR RANGE
OF RATED VOLTAGE
380-420 V ± 5% - 50 HZ

FOR MAINS VOLTAGE
400 V - 50 HZ

TEMPERATURE RISE TO CLASS B

Type		kW	HP	min^{-1}	M_N Nm	η 100%	cos φ	I_N 400V	I_N 380-420V	I_A/I_N	M_A/M_N	J 10^{-3} kgm²	kg
1500/1000 min^{-1} (4/6 poles) - separate windings													
AMV 71Z AA	**4/6**	0.25/0.08	0.33/0.11	1370/900	1.7/0.4	60/40	0.80/0.70	0.75/0.4	0.8/0.45	3.0/2.5	1.6/1.6	1.15	6.7
AMV 71Z BA	**4/6**	0.37/0.13	0.50/0.18	1360/880	2.6/1.4	62/44	0.80/0.70	1.0/0.6	1.1/0.7	3.2/2.6	1.6/1.6	1.24	7.2
AMV 80Z AA	**4/6**	0.55/0.18	0.75/0.25	1380/920	3.8/1.9	60/42	0.83/0.82	1.60/0.75	1.7/0.8	3.5/2.4	1.6/1.0	1.97	8.3
AMV 80Z BA	**4/6**	0.75/0.25	1.0/0.33	1400/940	5.1/2.5	70/60	0.82/0.72	1.8/0.8	1.9/0.9	4.2/2.6	1.6/1.3	4.05	14
AMV 90S AA	**4/6**	0.75/0.24	1.0/0.32	1400/950	5.1/2.4	70/60	0.82/0.72	1.9/0.8	2.0/0.9	4.2/2.6	1.6/1.3	4.05	14
AMV 90L BA	**4/6**	1.1/0.37	1.5/0.50	1400/930	7.5/3.8	70/60	0.81/0.74	2.8/1.2	3.0/1.3	4.3/2.7	1.6/1.2	4.78	16.4
AMV 90L CA	**4/6**	1.5/0.5	2.0/0.67	1420/950	10.1/5	73/64	0.80/0.70	3.52/1.52	3.7/1.6	4.8/2.6	1.5/1.3	5.98	20.5
AMV 100L AA	**4/6**	1.85/0.60	2.5/0.75	1400/920	12.6/6.2	74/64	0.80/0.73	4.6/1.9	4.8/2.1	4.8/3.1	1.8/1.5	6.73	23.4
AMV 100L BA	**4/6**	2.2/0.75	3.0/1.0	1420/950	14.8/7.5	76/66	0.79/0.75	5.1/2.1	5.3/2.2	5.0/3.5	1.7/1.3	9.25	22.6
AMV 112M AA	**4/6**	3/1.0	4.0/1.34	1440/970	19.9/9.8	80/73	0.81/0.65	6.6/3.0	6.8/3.2	5.8/4.6	2.5/2.1	13.3	30.4
AMV 132S AA	**4/6**	3.8/1.3	5.2/1.8	1460/970	24.9/12.8	85.0/75.0	0.8/0.72	8.1/3.5	8.5/4	6.5/4.0	2.2/1.7	22.4	41.9
AMV 132M BA	**4/6**	4.4/1.5	6.0/2.0	1460/970	28.8/14.8	86.0/78.2	0.85/0.73	8.7/3.8	9.2/4.3	6.5/4.4	2.2/1.7	29.25	51.0
AMV 132M CA	**4/6**	5.5/1.8	7.5/2.4	1460/970	36/17.7	86.8/80.0	0.84/0.74	10.9/4.4	12.0/4.	7.0/4.7	2.6/1.8	37.25	65.0
AMV 132M DA	**4/6**	6.3/2.2 [1)]	8.6/3.0 [1)]	1460/970	41.2/21.7	86.8/81.0	0.84/0.73	12.5/5.4	13.5/5.	7.2/4.8	2.6/1.9	37.25	66.0
AMV 160M AA	**4/6**	7.5/2.5	10.0/3.4	1470/975	48.7/24.5	87.5/83.0	0.83/0.75	14.9/5.8	15.6/6.0	8.3/4.5	2.5/1.9	81.25	88.5
AMV 160L BA	**4/6**	11.0/3.7	15.0/5.0	1470/970	71.5/36.4	88.0/84.2	0.81/0.73	22.5/8.7	23.4/9.0	8.0/4.8	2.4/1.8	105.75	106.5
AMV 160L CA	**4/6**	13.0/4.0 [1)]	17.7/5.4 [1)]	1460/970	85/39.4	88.0/84.5	0.81/0.72	26.3/9.5	27.5/10	8.0/4.8	2.4/1.9	105.75	106.5

Type		kW	HP	min^{-1}	M_N Nm	η 100%	cos φ	I_N 400V	I_N 380-420V	I_A/I_N	M_A/M_N	J 10^{-3} kgm²	kg
1000/750 min^{-1} (6/8 poles) - separate windings													
AMV 80Z AA	**6/8**	0.25/0.11	0.33/0.15	930/720	2.6/1.5	53/49	0.79/0.62	0.9/0.55	1.0/0.7	2.9/3.0	1.6/1.8	1.97	7.9
AMV 80Z BA	**6/8**	0.37/0.15	0.50/0.25	920/715	3.8/2	52/47	0.81/0.63	1.3/0.8	1.4/0.9	2.8/2.8	1.4/1.9	2.47	9.5
AMV 90L AA	**6/8**	0.55/0.22	0.75/0.30	960/740	5.5/2.8	65/47	0.62/0.51	2.0/1.4	2.1/1.5	3.9/2.9	2.5/2.1	4.78	16.2
AMV 90L BA	**6/8**	0.75/0.30	1.0/0.40	940/720	7.6/4	64/45.5	0.67/0.52	2.5/1.85	2.7/1.9	3.4/2.6	2.2/1.9	4.78	16.2
AMV 100L AA	**6/8**	1.1/0.45	1.5/0.60	950/710	11.1/6.1	70.6/58	0.71/0.67	3.1/1.7	3.3/1.8	4.3/2.8	2.0/1.3	9.43	22.0
AMV 112M AA	**6/8**	1.5/0.6	2.0/0.80	970/720	14.8/8	75.8/65	0.65/0.60	4.4/2.3	3.7/2.5	5.5/3.4	2.8/2.1	18.70	39.0
AMV 132S ZA	**6/8**	2.2/0.9	3.0/1.2	970/715	21.7/12	78.0/69.0	0.67/0.55	6.1/3.5	6.7/4.0	4.8/4.0	1.6/1.6	29.5	42.5
AMV 132M YA	**6/8**	3/1.2	4.0/1.6	960/715	29.8/16	80/72	0.7/0.55	7.8/4.4	8.2/4.8	4.8/4.1	1.6/1.6	37.75	55.5
AMV 132M ZA	**6/8**	4/1.6	5.5/2.2	960/715	39.8/21.4	81.0/74.0	0.78/0.6	9.2/5.2	9.8/5.6	5.3/4.4	1.7/1.7	44.5	64.1
AMV 160M YA	**6/8**	5.5/2.2	7.5/3.0	970/730	54.1/28.8	83/76	0.77/0.6	12.5/7	13.5/7.5	5.7/5.6	1.6/1.9	112.7	88.0
AMV 160M ZA	**6/8**	7/3	9.5/4.1	970/730	68.9/39.2	84/77	0.80/0.65	15/8.7	16/9.3	6.0/5.8	1.7/2.2	150.25	97.5

1) Temperature rise to class F

THREE-PHASE FRAME SIZE 80 - 160 IM B3
AMH - AMPH* SERIES - ALUMINIUM ALLOY FRAME

*Only AMPH 2 poles motors. For AMPH 4 poles motors, please consult us

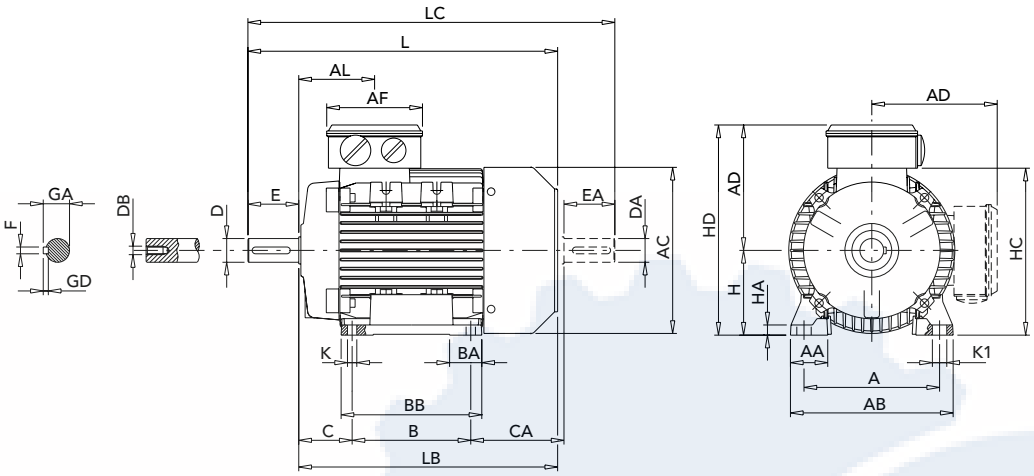

IEC	Poles	kW	H	A	B	C	K [1]	AB	BB	CA	AD [2]	HD [2]	AC	HC
80	2 - 4	all	80	125	100	50	10	153	125	89	129	209	160	162
90S	2 - 4	all	90	140	100	56	10	170	150	116	138	228	180	181
90L	2 - 4	all	90	140	125	56	10	170	150	91	138	228	180	181
100	2	all	100	160	140	63	11	192	166	110	145	245	196	198
	4	2.2	100	160	140	63	11	192	166	110	145	245	196	198
	4	3	100	160	140	63	11	192	166	144	145	245	194	198
112	2 - 4	all	112	190	140	70	12.5	220	176	126	160	272	225	225
132S	2	5.5	132	216	140	89	12	256	180	134	194	326	248	261
	2	7.5	132	216	140	89	12	256	180	154	194	326	248	261
	4	5.5	132	216	140	89	12	256	180	134	194	326	248	261
132M	2	all	132	216	178	89	12	256	218	156	194	326	248	261
	4	all	132	216	178	89	12	256	218	136	194	326	248	261
160M	2 - 4	all	160	254	210	108	14	320	270	180	238	398	317	316
160L	2 - 4	all	160	254	254	108	14	320	310	180	238	398	317	316

IEC	Poles	kW	HA	K1	L	LB	LC	AL	AF	BA	AA	D/DA	E/EA	F/FA	GD/GF	GA/GC	DB/DC [3]
80	2 - 4	all	9.5	14	272	232	319	79	116	28.5	34.5	19	40	6	6	21.5	M6
90S	2 - 4	all	11	15	317	267	372	85	116	28/53	37	24	50	8	7	27	M8
90L	2 - 4	all	11	15	317	267	372	85	116	28/53	37	24	50	8	7	27	M8
100	2	all	12	17	366	306	433	91	116	38	44	28	60	8	7	31	M10
	4	2.2	12	17	366	306	433	91	116	38	44	28	60	8	7	31	M10
	4	3	12	17	400	340	467	91	116	38	44	28	60	8	7	31	M10
112	2 - 4	all	15	19	388	328	456	92	116	46	48	28	60	8	7	31	M10
132S	2	5.5	17	20	445	365	523	100	133	45	59	38	80	10	8	41	M12
	2	7.5	17	20	465	385	543	100	133	45	59	38	80	10	8	41	M12
	4	5.5	17	20	445	365	523	100	133	45	59	38	80	10	8	41	M12
132M	2	all	17	20	505	425	583	120	133	45	59	38	80	10	8	41	M12
	4	all	17	20	485	405	563	120	133	45	59	38	80	10	8	41	M12
160M	2 - 4	all	23	18	608	498	668	146	150	65	76	42/28	110/60	12/8	8/7	45/31	M16/M10
160L	2 - 4	all	23	18	652	542	712	168	150	65	76	42/28	110/60	12/8	8/7	45/31	M16/M10

1) Clearance hole for screw
2) Maximun distance
3) Centering holes in shaft extensions to DIN 332 part 2

THREE-PHASE FRAME SIZE 71 - 160 IM B3
AMHE - AMPE* SERIES - ALUMINIUM ALLOY FRAME

*Only AMPE 2 poles motors. For AMPE 4 poles motors, please consult us

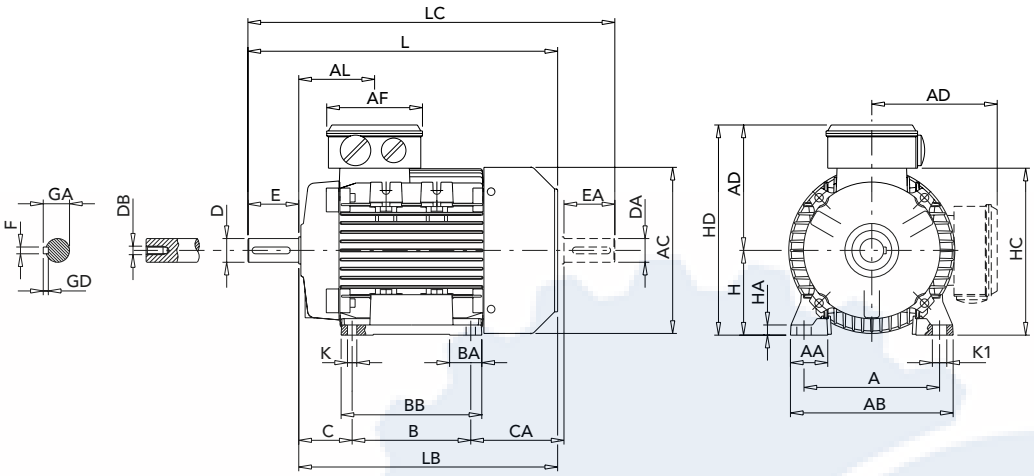

IEC	Poles	kW	H	A	B	C	K [1]	AB	BB	CA	AD [2]	HD [2]	AC	HC
71	2	0.75	71	112	90	45	8	135	108	83	110	181	139	142
80	2 - 4	all	80	125	100	50	10	153	125	89	129	209	160	162
90S	2 - 4	all	90	140	100	56	10	170	150	116	138	228	180	181
90L	2	2.2	90	140	125	56	10	170	150	91	138	228	180	181
	2	3	90	140	125	56	10	170	150	114	138	228	180	181
	4	1.5	90	140	125	56	10	170	150	91	138	228	180	181
100	2	all	100	160	140	63	11	192	166	110	145	245	196	198
	4	2.2	100	160	140	63	11	192	166	110	145	245	196	198
	4	3	100	160	140	63	11	192	166	144	145	245	194	198
112	2	4 - 5.5	112	190	140	70	12.5	220	176	126	160	272	225	225
	2	7.5	112	190	140	70	12.5	220	176	148	160	272	222	225
	4	all	112	190	140	70	12.5	220	176	126	160	272	225	225
132S	2	5.5	132	216	140	89	12	256	180	134	194	326	248	261
	2	7.5	132	216	140	89	12	256	180	154	194	326	248	261
	4	5.5	132	216	140	89	12	256	180	134	194	326	248	261
132M	2	9.2 - 11	132	216	178	89	12	256	218	156	194	326	248	261
	2	15	132	216	178	89	12	256	218	207	194	326	248	261
	4	all	132	216	178	89	12	256	218	136	194	326	248	261
160M	2 - 4	all	160	254	210	108	14	320	270	180	238	398	317	316
160L	2 - 4	all	160	254	254	108	14	320	310	180	238	398	317	316

IEC	Poles	kW	HA	K1	L	LB	LC	AL	AF	BA	AA	D/DA	E/EA	F/FA	GD/GF	GA/GC	DB/DC [3]
71	2	0.75	9	11	246	216	278	69	92	28	31	14	30	5	5	16	M5
80	2 - 4	all	9.5	14	272	232	319	79	116	28.5	34.5	19	40	6	6	21.5	M6
90S	2 - 4	all	11	15	317	267	372	85	116	28/53	37	24	50	8	7	27	M8
90L	2	2.2	11	15	317	267	372	85	116	28/53	37	24	50	8	7	27	M8
	2	3	11	15	340	290	395	85	116	28/53	37	24	50	8	7	27	M8
	4	1.5	11	15	317	267	372	85	116	28/53	37	24	50	8	7	27	M8
100	2	all	12	17	366	306	433	91	116	38	44	28	60	8	7	31	M10
	4	2.2	12	17	366	306	433	91	116	38	44	28	60	8	7	31	M10
	4	3	12	17	400	340	467	91	116	38	44	28	60	8	7	31	M10
112	2	4 - 5.5	15	19	388	328	456	92	116	46	48	28	60	8	7	31	M10
	2	7.5	15	19	410	350	478	92	116	46	48	28	60	8	7	31	M10
	4	all	15	19	388	328	456	92	116	46	48	28	60	8	7	31	M10
132S	2	5.5	17	20	445	365	523	100	133	45	59	38	80	10	8	41	M12
	2	7.5	17	20	465	385	543	100	133	45	59	38	80	10	8	41	M12
	4	5.5	17	20	445	365	523	100	133	45	59	38	80	10	8	41	M12
132M	2	9.2 - 11	17	20	505	425	583	120	133	45	59	38	80	10	8	41	M12
	2	15	17	20	556	476	634	120	133	45	59	38	80	10	8	41	M12
	4	all	17	20	485	405	563	120	133	45	59	38	80	10	8	41	M12
160M	2 - 4	all	23	18	608	498	668	146	150	65	76	42/28	110/60	12/8	8/7	45/31	M16/M10
160L	2 - 4	all	23	18	652	542	712	168	150	65	76	42/28	110/60	12/8	8/7	45/31	M16/M10

1) Clearance hole for screw 2) Maximun distance 3) Centering holes in shaft extensions to DIN 332 part 2

THREE-PHASE FRAME SIZE 71-160 IMB3
AMEE SERIES - ALLUMINIUM ALLOY FRAME

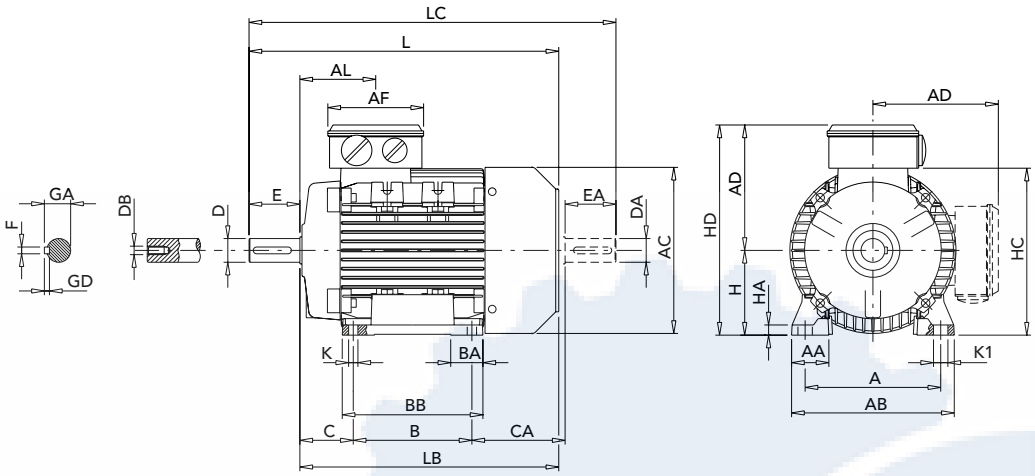

IEC	Poles	kW	H	A	B	C	K[1]	AB	BB	CA	AD[2]	HD[2]	AC	HC
71	2	0.75	71	112	90	45	8	135	107	81	110	181	139	142
80	2-4	all	80	125	100	50	10	153	125	89	129	209	160	162
90S	2-4-6	all	90	140	100	56	10	170	150	116	138	228	180	181
90L	2-4-6	all	90	140	125	56	10	170	150	91	138	228	180	181
100	2-4-6	all	100	160	140	63	11	192	166	110	145	245	196	198
112	**2**	**4-5.5**	112	190	140	70	12.5	220	176	126	160	272	225	225
	2	7.5	112	190	140	70	12.5	220	176	148	160	272	222	225
	4	4	112	190	140	70	12.5	220	176	126	160	272	225	225
	4	5.5	112	190	140	70	12.5	220	176	148	160	272	222	225
	6	all	112	190	140	70	12.5	220	176	126	160	272	225	225
132S	2-4-6	all	132	216	140	89	12	256	180	134	194	326	248	261
132M	2	9.2	132	216	178	89	12	256	218	136	194	326	248	261
	2	11	132	216	178	89	12	256	218	156	194	326	248	261
	2	15	132	216	178	89	12	256	218	207	194	326	248	261
	4	7.5	132	216	178	89	12	256	218	136	194	326	248	261
	4	9.2	132	216	178	89	12	256	218	136	194	326	248	261
	6	4	132	216	178	89	12	256	218	136	194	326	248	261
	6	5.5	132	216	178	89	12	256	218	136	194	326	248	261
160M	2-4-6	all	160	254	210	108	14	320	270	180	238	398	317	316
160L	2-4-6	all	160	254	254	108	14	320	310	180	238	398	317	316

IEC	Poles	kW	HA	K1	L	LB	LC	AL	AF	BA	AA	D/DA	E/EA	F/FA	GD/GF	GA/GC	DB/DC[3]
71	2	0.75	9	11	246	216	278	69	92	28	31	14	30	5	5	16	M5
80	2-4	all	9.5	14	272	232	319	79	116	29	35	19	40	6	6	21.5	M6
90S	2-4-6	all	11	15	317	267	372	85	116	28/53	37	24	50	8	7	27	M8
90L	2-4-6	all	11	15	317	267	372	85	116	28/53	37	24	50	8	7	27	M8
100	2-4-6	all	12	17	366	306	433	91	116	38	44	28	60	8	7	31	M10
112	2	4-5.5	15	19	388	328	456	92	116	46	48	28	60	8	7	31	M10
	2	7.5	15	19	410	350	478	92	116	46	48	28	60	8	7	31	M10
	4	4	15	19	388	328	456	92	116	46	48	28	60	8	7	31	M10
	4	5.5	15	19	410	350	478	92	116	46	48	28	60	8	7	31	M10
	6	all	15	19	388	328	456	92	116	46	48	28	60	8	7	31	M10
132S	2-4-6	all	17	20	445	365	523	102	133	45	59	38	80	10	8	41	M12
132M	2	9.2	17	20	485	405	563	122	133	45	59	38	80	10	8	41	M12
	2	11	17	20	505	425	583	122	133	45	59	38	80	10	8	41	M12
	2	15	17	20	556	476	634	122	133	45	59	38	80	10	8	41	M12
	4	7.5	17	20	485	405	563	122	133	45	59	38	80	10	8	41	M12
	4	9.2	17	20	505	425	583	122	133	45	59	38	80	10	8	41	M12
	6	4	17	20	485	405	563	122	133	45	59	38	80	10	8	41	M12
	6	5.5	17	20	505	425	583	122	133	45	59	38	80	10	8	41	M12
160M	2-4-6	all	23	18	608	498	668	146	150	65	76	42/28	110/60	12/8	8/7	45/31	M16/M10
160L	2-4-6	all	23	18	652	542	712	168	150	65	76	42/28	110/60	12/8	8/7	45/31	M16/M10

1) Clearance hole for screw 2) Maximun distance 3) Centering holes in shaft extensions to DIN 332 part 2

THREE-PHASE FRAME SIZE 56 - 160 IM B3
AM SERIES - ALUMINIUM ALLOY FRAME

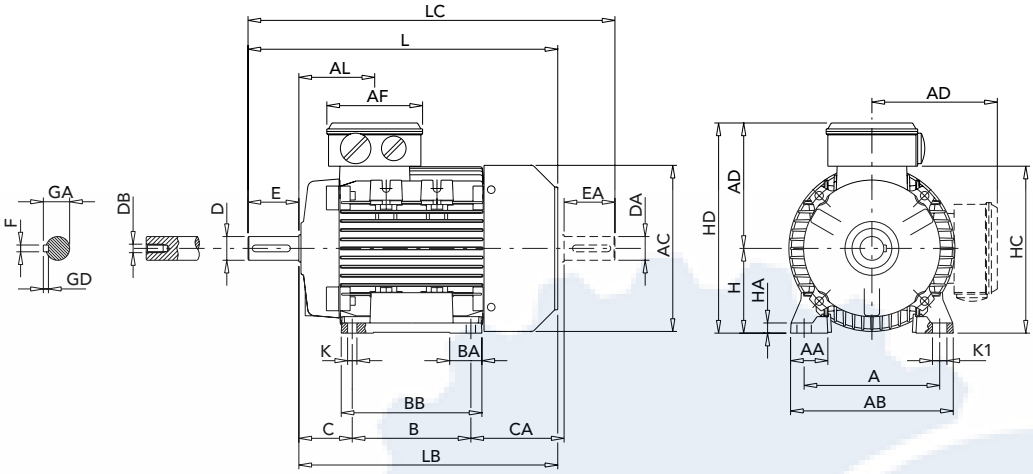

IEC	H	A	B	C	K [1]	AB	BB	CA	AD [2]	HD [2]	AC	HC	HA
56	56	90	71	36	6	107	86	64	92	148	110	109	8
63	63	100	80	40	7	120	100	72	96	159	124	120	8
71	71	112	90	45	8	135	108	83	110	181	139	142	9
80	80	125	100	50	10	153	125	89	129	209	160	162	9.5
90S	90	140	100	56	10	170	150	116	138	228	180	181	11
90L	90	140	125	56	10	170	150	91	138	228	180	181	11
100	100	160	140	63	11	192	166	110	145	245	196	198	12
112	112	190	140	70	12.5	220	175	126	161	273	225	226	15
132S	132	216	140	89	12	256	180	134	195	327	248	261	17
132M	132	216	178	89	12	256	218	136	195	327	248	261	17
132M [4]	132	216	178	89	12	256	218	166	195	327	248	261	17
160M	160	254	210	108	14	320	270	180	238	398	317	316	23
160L	160	254	254	108	14	320	310	180	238	398	317	316	23
160L [5]	160	254	254	108	14	320	310	210	238	398	317	316	23

IEC	K1	L	LB	LC	AL	AF	BA	AA	D/DA	E/EA	F/FA	GD	GA/GC	DB [3]
56	9	188	168	211	61	92	27	27	9	20	3	3	10.2	M3
63	11	211	188	238	63	92	29	30	11	23	4	4	12.5	M4
71	11	246	216	278	69	92	28	31	14	30	5	5	16	M5
80	14	272	232	319	79	116	28.5	34.5	19	40	6	6	21.5	M6
90S	15	317	267	372	85	116	28/53	37	24	50	8	7	27	M8
90L	15	317	267	372	85	116	28/53	37	24	50	8	7	27	M8
100L	17	366	306	433	91	116	38	44	28	60	8	7	31	M10
112M	19	388	328	456	91.5	116	46	48	28	60	8	7	31	M10
132S	20	442	362	523	100	133	45	59	38	80	10	8	41	M12
132M	20	482	402	563	120	133	45	59	38	80	10	8	41	M12
132M [4]	20	500	420	593	120	133	45	59	38	80	10	8	41	M12
160M	18	608	498	718	146	150	65	76	42	110	12	8	45	M16
160L	18	652	542	762	168	150	65	76	42	110	12	8	45	M16
160L [5]	18	678	568	678	168	150	65	76	42	110	12	8	45	M16

1) Clearance hole for screw
2) Maximum dimension
3) Centering holes in shaft extensions to DIN 332 part 2
4) Only for MT A2
5) Only for LR A4

THREE-PHASE FRAME SIZE 56 - 160 IM B14, IM B5
AM-AMEE-AMHE-AMH-AMPE-AMPH SERIES - ALUMINIUM ALLOY FRAME

IM B14

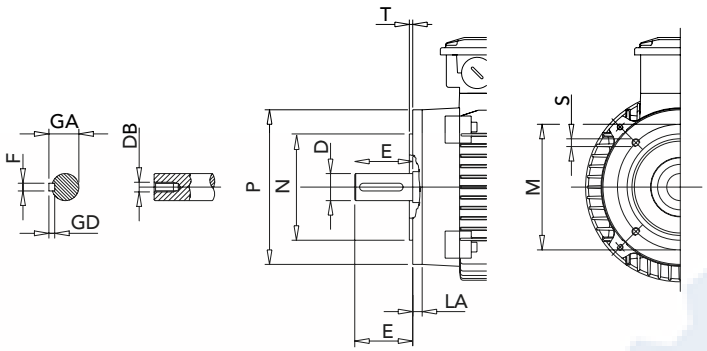

IM B5

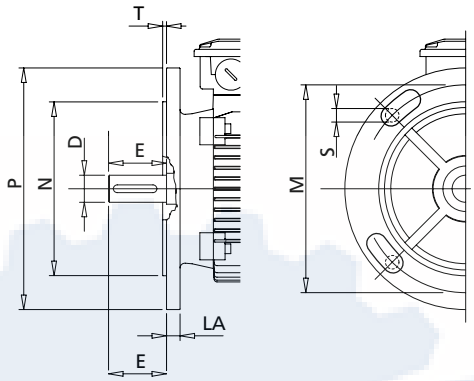

	SMALL FLANGE B14						LARGE FLANGE B14						FLANGE B5					
IEC	P	N	LA	M	T	S	P	N	LA	M	T	S	M	N	P	T	LA	S[1]
56	80	50	8	65	2.5	M5	105	70	8	85	2.5	M6	100	80	120	2.5	7	M6
63	90	60	8	75	2.5	M5	120	80	8	100	2.5	M6	115	95	140	3	8	M8
71	105	70	8	85	2.5	M6	140	95	8	115	3	M8	130	110	160	3.5	10	M8
80	120	80	9	100	3	M6	160	110	8.5	130	3.5	M8	165	130	200	3.5	10	M10
90	140	95	9	115	3	M8	160	110	9	130	3.5	M8	165	130	200	3.5	12	M10
100	160	110	10	130	3.5	M8	200	130	12	165	3.5	M10	215	180	250	4	14	M12
112	160	110	10	130	3.5	M8	200	130	12	165	3.5	M10	215	180	250	4	14	M12
132	200	130	30	165	3.5	M10	250	180	12	215	4	M12	265	230	300	4	14	M12
160	250	180	12	215	4	M12	300	230	12	265	5	M16	300	250	350	5	15	M16

1) Clearence hole for screw. Hole as standard for 132 to 160 frame size

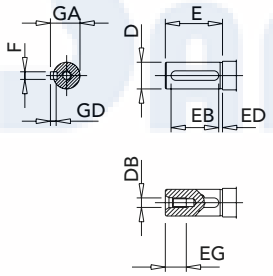

IEC	D	E	F h9	GD	GA	DB[1]	EG	EB	ED
56	9 j6	20	3	3	10.2	M3	10	15	2.5
63	11 j6	23	4	4	12.5	M4	10	15	4
71	14 j6	30	5	5	16	M5	12.5	20	4
80	19 j6	40	6	6	21.5	M6	16	30	4
90	24 j6	50	8	7	27	M8	19	40	4
100	28 j6	60	8	7	31	M10	22	50	4
112	28 j6	60	8	7	31	M10	22	50	4
132	38 k6	80	10	8	41	M12	28	70	4
160	42 k6	110	12	8	45	M16	36	100	4

1) Centering holes in shaft extension to DIN 332 part 2

THREE-PHASE FRAME SIZE 180 - 315 IM B3
AMHE SERIES - CAST IRON FRAME

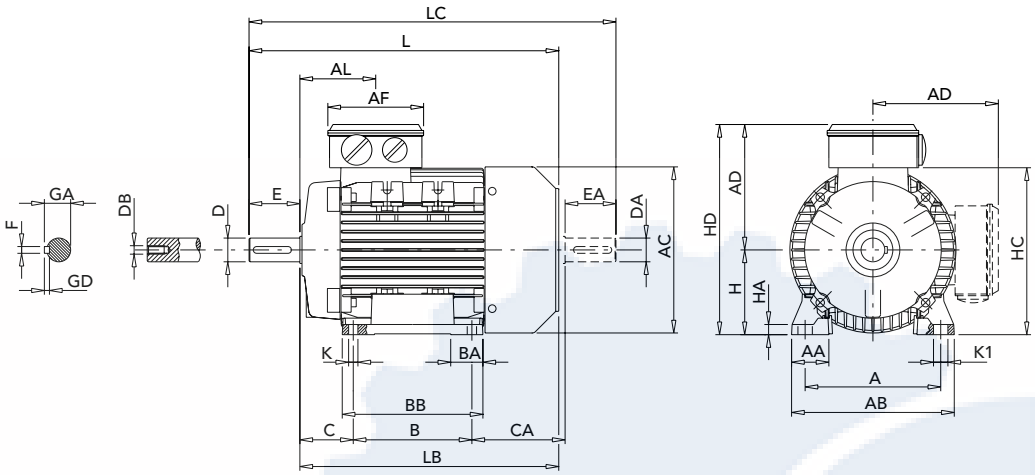

IEC	Poles	H	A	B	C	K [1]	AB	BB	AD	HD	AC
180M	≥ 2	180	279	241	121	15	354	311	268	439	360
180L	≥ 2	180	279	279	121	15	354	348	268	439	360
200	≥ 2	200	318	305	133	19	393	370	297	497	399
225S	≥ 4	225	356	286	149	19	440	361	333	553	465
225M	2	225	356	311	149	19	440	386	333	553	465
	≥ 4	225	356	311	149	19	440	386	333	553	465
250	2	250	406	349	168	24	484	443	366	616	506
	≥ 4	250	406	349	168	24	484	443	366	616	506
280S	2	280	457	368	190	24	560	459	395	668	559
	≥ 4	280	457	368	190	24	560	459	395	668	559
280M	2	280	457	419	190	24	560	510	395	668	559
	≥ 4	280	457	419	190	24	560	510	395	668	559
315S	2	315	508	406	216	28	628	590	530	840	680
	≥ 4	315	508	406	216	28	628	590	530	840	680
315M	2	315	508	457	216	28	628	672	530	840	680
	≥ 4	315	508	457	216	28	628	672	530	840	680
315L	2	315	508	508	216	28	628	672	530	840	680
	≥ 4	315	508	508	216	28	628	672	530	840	680

IEC	Poles	HA	L	LB	AL	AA	D	E	F	GD	GA	DB [2]
180M	≥ 2	27	687	577	241	75	48	110	14	9	51.5	M16
180L	≥ 2	27	725	615	241	75	48	110	14	9	51.5	M16
200	≥ 2	25	768	658	285	80	55	110	16	10	59	M20
225S	≥ 4	28	814	674	295	85	60	140	18	11	64	M20
225M	2	28	809	699	295	85	55	110	16	10	59	M20
	≥ 4	28	839	699	295	85	60	140	18	11	64	M20
250	2	30	918	778	342	80	60	140	18	11	64	M20
	≥ 4	30	918	778	342	80	65	140	18	11	69	M20
280S	2	34	984	844	400	100	65	140	18	11	69	M20
	≥ 4	34	984	844	400	100	75	140	20	12	79.5	M20
280M	2	34	1035	895	400	100	65	140	18	11	69	M20
	≥ 4	34	1035	895	400	100	75	140	20	12	79.5	M20
315S	2	45	1160	1205	292	120	65	140	18	11	69	M20
	≥ 4	45	1190	1235	292	120	80	170	22	14	85	M20
315M	2	45	1310	1355	292	120	65	140	18	11	69	M20
	≥ 4	45	1340	1385	292	120	80	170	22	14	85	M20
315L	2	45	1310	1355	292	120	65	140	18	11	69	M20
	≥ 4	45	1340	1385	292	120	80	170	22	14	85	M20

THREE-PHASE FRAME SIZE 180 - 315 IM B5
AMHE SERIES - CAST IRON FRAME

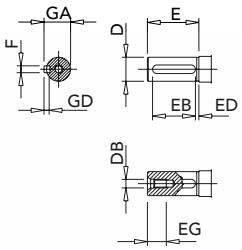

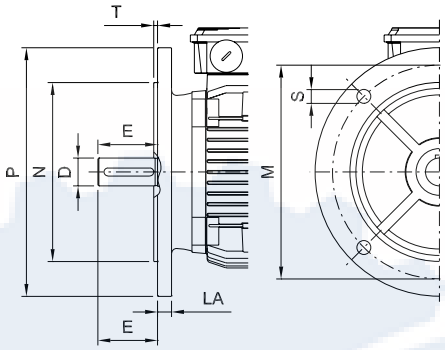

IEC	Poles	M	N	P	T	LA	S [1]	D	E
180M	≥ 2	300	250	350	5	15	19	48	110
180L	≥ 2	300	250	350	5	15	19	48	110
200	≥ 2	350	300	400	5	17	19	55	110
225S	≥ 4	400	350	450	5	20	19	60	140
225M	2	400	350	450	5	20	19	55	110
	≥ 4	400	350	450	5	20	19	60	140
250	2	500	450	550	5	20	19	60	140
	≥ 4	500	450	550	5	20	19	65	140
280S	2	500	450	550	5	22	19	65	140
	≥ 4	500	450	550	5	22	19	75	140
280M	2	500	450	550	5	22	19	65	140
	≥ 4	500	450	550	5	22	19	75	140
315S	2	600	550	660	6	22	24	65	140
	≥ 4	600	550	660	6	22	24	80	170
315M	2	600	550	660	6	22	24	65	140
	≥ 4	600	550	660	6	22	24	80	170
315L	2	600	550	660	6	22	24	65	140
	≥ 4	600	550	660	6	22	24	80	170

IEC	Poles	F	GD	GA	DB [2]	EB	ED	EG
180M	≥ 2	14	9	51.5	M16	90	10	36
180L	≥ 2	14	9	51.5	M16	90	10	36
200	≥ 2	16	10	59	M20	90	10	42
225S	≥ 4	18	11	64	M20	110	15	42
225M	2	16	10	59	M20	90	10	42
	≥ 4	18	11	64	M20	110	15	
250	2	18	11	64	M20	110	20	42
	≥ 4	18	11	69	M20	110	20	42
280S	2	18	11	69	M20	110	18	42
	≥ 4	20	12	79.5	M20	110	18	
280M	2	18	11	69	M20	110	18	42
	≥ 4	20	12	79.5	M20	110	18	42
315S	2	18	11	69	M20	110	15	42
	≥ 4	22	14	85	M20	140	15	42
315M	2	18	11	69	M20	110	15	42
	≥ 4	22	14	85	M20	140	15	42
315L	2	18	11	69	M20	110	15	42
	≥ 4	22	14	85	M20	140	15	42

1) Clearence hole for screw. According to CEI EN 50347, 8 holes on the flange for 225 to 315 frame size
2) Centering holes in shaft extension to DIN 332 part 2

All technical data, outputs, dimensions and weights stated in this catalogue are subject to change without prior notice.

The illustrations are not binding.

Printed in June 2012.

رهاب صنعت سپاهان
Rahab sanat sepahanco

Branches & Partners

Lafert GmbH
Olgastraße 34/1
D - 73728 Esslingen - Germany
Phone +49 / (0) 711 540 3095 + 7
Fax +49 / (0) 711 540 3098
lafert.germany@lafert.com

Lafert Electric Motors Ltd.
Electra House - Electra Way
Crewe, Cheshire CW1 6GL
United Kingdom
Phone +44 / (0) 1270 270 022
Fax +44 / (0) 1270 270 023
lafertuk@lafert.com

Lafert Moteurs S.A.S.
L'Isle d'Abeau Parc de Chesnes
75, rue de Malacombe
F - 38070 St. Quentin-Fallavier
France
Phone +33 / 474 95 41 01
Fax +33 / 474 94 52 28
info.lafertmoteurs@lafert.com

Lafert Motores Eléctricos, S.L.
Polígono Pignatelli, Nave 27
E - 50410 Cuarte de Huerva
(Zaragoza) - Spain
Phone +34 / 976 503 822
Fax +34 / 976 504 199
info@lafertmotoreselectricos.com

Lafert N.A. (North America)
5620 Kennedy Road - Mississauga
Ontario L4Z 2A9 - Canada
Phone +1 / 800/661 6413 - 905/629 1939
Fax +1 / 905/629 2852
sales@lafertna.com

Lafert Electric Motors (Australia)
Unit 3 - 891 Princes Highway
AUS - Springvale VIC 3171 - Australia
Phone +61 / (03) 9546 7515
Fax +61 / (03) 9547 9396
lafert@bigpond.com

Lafert Singapore Pte Ltd
48 Hillview Terrace #03-08
Hillview Building - Singapore 669269
Phone +65 / 67630400 - 67620400
Fax +65 / 67630600
info@lafert.com.sg

ENERGY EFFICIENT Motors

CUSTOMISED Motors

HIGH PERFORMANCE Motors

SERVO Motors & Drives

LIFT Motors

رهاب صنعت سپاهان
Rahab sanat sepahanco
btobcomunica.com

1050/12

LAFERTGROUP
50 SINCE 1962

Lafert S.p.A. Via J. F. Kennedy, 43 - I-30027 San Donà di Piave (Venezia), Italy
Tel. +39 / 0421 229 611 | Fax +39 / 0421 222 908 | info.lafert@lafert.com
www.lafert.com