Catalog | October 2015

Low voltage
Process performance motors

شرکت رهاب صنعت سپاهان
RAHAB SANAT
مرکز تخصصی فروش و خدمات انواع الکتروپمپ، گیربکس الکتروموتور
تلفن: ۵-۰۳۱۳۲۳۵۲۸۶۱
فکس: ۰۳۱۳۲۳۵۲۸۶۶
همراه: ۰۹۳۳۷۲۷۲۴۲۲
Rahab.sanat@gmail.com
اصفهان، خیابان مسجد سید
روبه‌روی خیابان پنج رمضان
فروش اینترنتی
www.rahabsanat.ir

Power and productivity
for a better world™

With expertise, and a comprehensive portfolio of products and life-cycle services, we help value-minded industrial customers improve their energy efficiency and productivity.

Low voltage Process performance motors
Sizes 63 to 450, 0.09 to 1000 kW

General information 4
Mounting arrangements . . . 8
Cooling . . . 9
Degrees of protection: IP code/IK code . . . 10
Insulation . . . 11
Voltage and frequency . . . 12
Surface treatment . . . 13

Cast iron motors 20
Ordering information . . . 20
Rating plates . . . 21
Technical data . . . 22
Variant codes . . . 38
Mechanical design . . . 43
Dimension drawings . . . 65
Accessories . . . 73
Cast iron motors in brief . . . 79
Motor construction . . . 82

Aluminum motors 84
Ordering information . . . 84
Rating plates . . . 85
Technical data . . . 86
Variant codes . . . 97
Mechanical design . . . 101
Dimension drawings . . . 112
Accessories . . . 134
Aluminum motors in brief . . . 135

Total product offering 137

Life cycle services and support 138

International motor efficiency standards

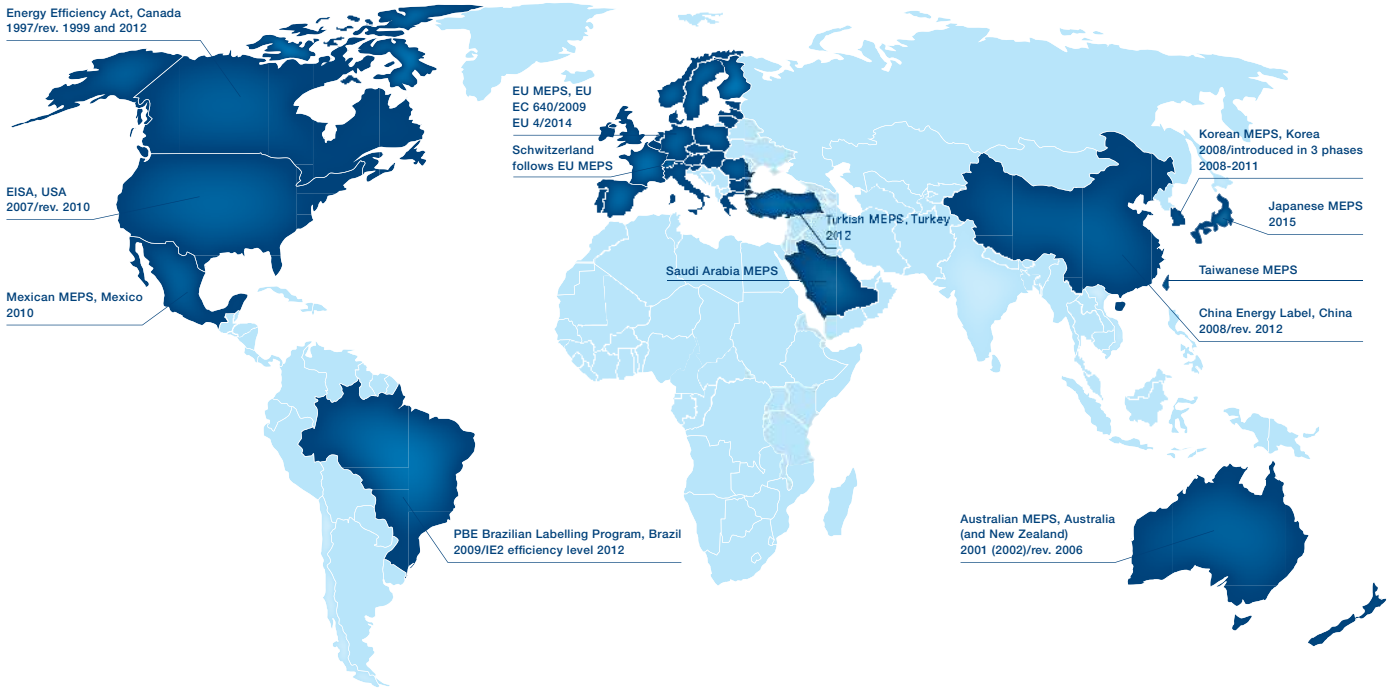

Since the validation of IEC/EN 60034-30:2008 and its refined version IEC/EN 60034-30-1: 2014 , a worldwide energy efficiency classification system has existed for low voltage three-phase asynchronous motors. This system increases the level of harmonization in efficiency regulations around the world and also covers motors for explosive atmospheres. IEC/EN 60034-30-1: 2014 defines International Efficiency (IE) classes for single speed, three-phase, 50 and 60 Hz induction motors. The standard is part of an effort to unify motor testing procedures as well as efficiency and product labeling requirements to enable motor purchasers worldwide to easily recognize premium efficiency products. The efficiency levels defined in IEC/EN 60034-30-1 are based on test methods specified in IEC/EN 60034-2-1 which has been updated to edition 2.0, 2014-06.

To promote transparency in the market, IEC 60034-30 states that both the efficiency class and efficiency value must be shown on the motor rating plate and in product documentation. The documentation must clearly indicate the efficiency testing method used as the different methods can produce differing results.

Minimum energy performance standards

While the IEC sets guidelines for motor testing and efficiency classes, the organization does not regulate efficiency. The biggest drivers for mandatory Minimum Energy Performance Standard (MEPS) levels for electric motors are global climate change, government targets to cut the CO_2 emissions and rising electricity demand, especially in developing countries. The whole value chain, from manufacturer up to end user, must be aware of the legislation in order to meet local requirements and additionally save energy and reduce carbon footprint.

Harmonized standards and the increasing adoption of MEPS around the world are good news. However, it is important to remember that harmonization is an ongoing process. Even though MEPS are already in effect in several regions, they are evolving and they differ in terms of scope and requirements. At the same time, new countries are planning to adopt their own MEPS. To get the latest information please visit www.abb.com/motors&generators/energyefficiency.

IEC/EN 60034-30-1: 2014

IEC/EN 60034-30-1:2014 defines four International Efficiency (IE) classes for single speed electric motors that are rated according to IEC 60034-1 or IEC 60079-0 (explosive atmospheres) and designed for operation on sinusoidal voltage.

- IE4 = Super premium efficiency
- IE3 = Premium efficiency, identical to 'NEMA Premium' in the USA for 60 Hz
- IE2 = High efficiency, identical to EPAct in the USA for 60 Hz
- IE1 = Standard efficiency

Efficiency levels defined in IEC/EN 60034-30-1 are based on test methods specified in IEC 60034-2-1.

IEC/EN 60034-30-1 covers power range 120 W to 1000 kW. All technical constructions of electric motors are covered as long as they are rated for direct on-line operation. The coverage of the standard includes:

- Single speed electric motors (single and three-phase), 50 and 60 Hz
- 2, 4, 6 and 8 poles
- Rated output P_N from 0.12 kW to 1000 kW
- Rated voltage U_N above 50 V up to 1 kV
- Motors, capable of continuous operation at their rated power with a temperature rise within the specified insulation temperature class
- Motors, marked with any ambient temperature within the range of -20 °C to +60 °C
- Motors, marked with an altitude up to 4000 m above sea level

The following motors are excluded from IEC/EN 60034-30-1:

- Single-speed motors with 10 or more poles or multi-speed motors
- Motors completely integrated into a machine (for example, pump, fan or compressor) that cannot be tested separately from machine
- Brake motors, when the brake can not be dismantled or separately fed

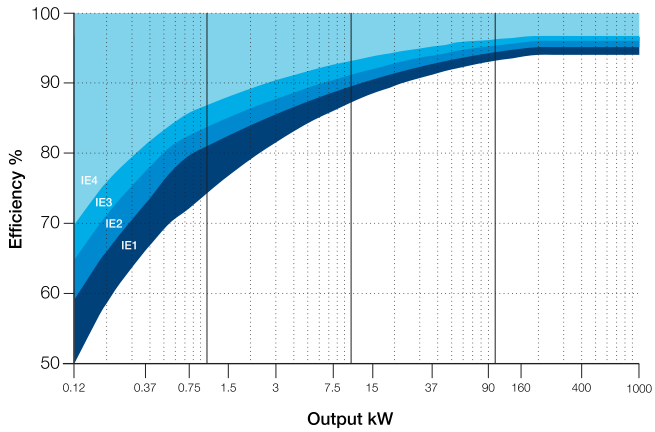

IE Classes - 4-pole motors

ABB and efficiency standards

ABB determines efficiency values according to IEC 60034-2-1 using the low uncertainty method (i.e. indirect method), with additional load losses determined by measurement.

As the world market leader, ABB offers the largest range of LV motors available. It has long advocated the need for efficiency in motors, and high efficiency products have formed the core of its portfolio for many years. The core of ABB's Process performance range is based on full range in IE2 and IE3 motors - with many available from stock. We also supply IE4 motors for additional energy savings.

Minimum efficiency values defined in IEC/EN 60034-30-1: 2014 (reference values at 50 Hz, based on test methods specified in IEC 60034-2-1 which has been updated to edition 2.0, 2014-06).

Output	IE1 Standard efficiency				IE2 High efficiency				IE3 Premium efficiency				IE4 Super Premium efficiency			
kW	2 pole	4 pole	6 pole	8 pole	2 pole	4 pole	6 pole	8 pole	2 pole	4 pole	6 pole	8 pole	2 pole	4 pole	6 pole	8 pole
0.12	45.0	50.0	38.3	31.0	53.6	59.1	50.6	39.8	60.8	64.8	57.7	50.7	66.5	69.8	64.9	62.3
0.18	52.8	57.0	45.5	38.0	60.4	64.7	56.6	45.9	65.9	69.9	63.9	58.7	70.8	74.7	70.1	67.2
0.20	54.6	58.5	47.6	39.7	61.9	65.9	58.2	47.4	67.2	71.1	65.4	60.6	71.9	75.8	71.4	68.4
0.25	58.2	61.5	52.1	43.4	64.8	68.5	61.6	50.6	69.7	73.5	68.6	64.1	74.3	77.9	74.1	70.8
0.37	63.9	66.0	59.7	49.7	69.5	72.7	67.6	56.1	73.8	77.3	73.5	69.3	78.1	81.1	78.0	74.3
0.40	64.9	66.8	61.1	50.9	70.4	73.5	68.8	57.2	74.6	78.0	74.4	70.1	78.9	81.7	78.7	74.9
0.55	69.0	70.0	65.8	56.1	74.1	77.1	73.1	61.7	77.8	80.8	77.2	73.0	81.5	83.9	80.9	77.0
0.75	72.1	72.1	70.0	61.2	77.4	79.6	75.9	66.2	80.7	82.5	78.9	75.0	83.5	85.7	82.7	78.4
1.1	75.0	75.0	72.9	66.5	79.6	81.4	78.1	70.8	82.7	84.1	81.0	77.7	85.2	87.2	84.5	80.8
1.5	77.2	77.2	75.2	70.2	81.3	82.8	79.8	74.1	84.2	85.3	82.5	79.7	86.5	88.2	85.9	82.6
2.2	79.7	79.7	77.7	74.2	83.2	84.3	81.8	77.6	85.9	86.7	84.3	81.9	88.0	89,5	87.4	84.5
3	81.5	81.5	79.7	77.0	84.6	85.5	83.3	80.0	87.1	87.7	85.6	83.5	89.1	90.4	88.6	85.9
4	83.1	83.1	81.4	79.2	85.8	86.6	84.6	81.9	88.1	88.6	86.8	84.8	90.0	91.1	89.5	87.1
5.5	84.7	84.7	93.1	81.4	87.0	87.7	86.0	83.8	89.2	89.6	88.0	86.2	90.9	91.9	90.5	88.3
7.5	86.0	86.0	84.7	83.1	88.1	88.7	87.2	85.3	90.1	90.4	89.1	87.3	91.7	92.6	91.3	89.3
11	87.6	87.6	86.4	85.0	89.4	89.8	88.7	86.9	91.2	91.4	90.3	88.6	92.6	93.3	92.3	90.4
15	88.7	88.7	87.7	86.2	90.3	90.6	89.7	88.0	91.9	92.1	91.2	89.6	93.3	93.9	92.9	91.2
18.5	89.3	89.3	88.6	86.9	90.9	91.2	90.4	88.6	82.4	92.6	91.7	90.1	93.7	94.2	93.4	91.7
22	89.9	89.9	89.2	87.4	91.3	91.6	90.9	89.1	92.7	93.0	92.2	90.6	94.0	94.5	93.7	92.1
30	90.7	90.7	90.2	88.3	92.0	92.3	91.7	89.8	93.3	93.6	92.9	91.3	94.5	94.9	94.2	92.7
37	91.2	91.2	90.8	88.8	92.5	92.7	92.2	90.3	93.7	93.9	93.3	91.8	94.8	95.2	94.5	93.1
45	91.7	91.7	91.4	89.2	92.9	93.1	92.7	90.7	94.0	94.2	93.7	92.2	95.0	95.4	94.8	93.4
55	92.1	92.1	91.9	89.7	93.2	93.5	93.1	91.0	94.3	94.6	94.1	92.5	95.3	95.7	95.1	93.7
75	92.7	92.7	92.6	90.3	93.8	94.0	93.7	91.6	94.7	95.0	94.6	93.1	95.6	96.0	95.4	94.2
90	93.0	93.0	92.9	90.7	94.1	94.2	94.0	91.9	95.0	95.2	94.9	93.4	95.8	96.1	95.6	94.4
110	93.3	93.3	93.3	91.1	94.3	94.5	94.3	92.3	95.2	95,4	95.1	93.7	96.0	96.3	95.8	94.7
132	93.5	93.5	93.5	91.5	94.6	94.7	94.6	92.6	95.4	95.6	95.4	94.0	96.2	96.4	96.0	94.9
160	93.8	93.8	93.8	91.9	94.8	94.9	94.8	93.0	95.6	95.8	95.6	94.3	96.3	96.6	96.2	95.1
200	94.0	94.0	94.0	92.5	95.0	95.1	95.0	93.5	95.8	96.0	95.8	94.6	96.5	96.7	96.3	95.4
250	94.0	94.0	94.0	92.5	95.0	95.1	95.0	93.5	95.8	96.0	95.8	94.6	96.5	96.7	96.5	95.4
315	94.0	94.0	94.0	92.5	95.0	95.1	95.0	93.5	95.8	96.0	95.8	94.6	96.5	96.7	96.6	95.4
355	94.0	94.0	94.0	92.5	95.0	95.1	95.0	93.5	95.8	96.0	95.8	94.6	96.5	96.7	96.6	95.4
400	94.0	94.0	94.0	92.5	95.0	95.1	95.0	93.5	95.8	96.0	95.8	94.6	96.5	96.7	96.6	95.4
450	94.0	94.0	94.0	92.5	95.0	95.1	95.0	93.5	95.8	96.0	95.8	94.6	96.5	96.7	96.6	95.4
500-1000	94.0	94.0	94.0	92.5	95.0	95.1	95.0	93.5	95.8	96.0	95.8	94.6	96.5	96.7	96.6	95.4

EU MEPS – Efficiency requirements for low voltage motors in Europe

Mandatory MEPS requirements

EU MEPS (European Minimum Energy Performance Standard) sets mandatory minimum efficiency levels for electric motors introduced into the European market. It is based on European Commission Regulation EC 640/2009 and an amendment passed in 2014, Regulation EU 4/2014.

MEPS scope

The MEPS scheme covers 2-, 4- and 6-pole single speed, three-phase induction motors in a power range 0.75 to 375 kW, rated up to 1000 V on the basis of continuous duty operation. The scheme is being implemented in three stages:

- Stage 1: 16 June 2011: Motors must meet the IE2 efficiency level
- Stage 2: 1 January 2015: Motors with a rated output of 7.5 - 375 kW must meet EITHER the IE3 efficiency level if driven direct-on-line OR the IE2 level if fitted with a variable speed drive
- Stage 3: 1 January 2017: Motors with a rated output of 0.75 - 375 kW must meet EITHER the IE3 efficiency level if driven direct-on-line OR the IE2 level if fitted with a variable speed drive

The amendment (Regulation EU 4/2014) did not change the scope of EU MEPS but it did change the details concerning which motors are excluded.

Efficiency testing methods

Motor losses and efficiency values in the EU MEPS scheme must be determined using the methods specified in standard IEC 60034-2-1:06-2014. International efficiency classes (IE4, IE3, IE2 and IE1) are defined in standard IEC 60034-30-1.

Compulsory efficiency levels

The table of minimum efficiency values on the previous page shows values according to IEC 60034-30-1:2014. Please note that this standard covers a wider range of motors than EU MEPS, which is still based on the previous standard (IEC 60034-30). Specifically, EU MEPS does not apply to 8-pole motors, or to motors rated below 0.75 or above 375 kW. IE1 motors have been excluded from the European market since EU MEPS came into force on 16 June 2011. Regulation EC 640/2009 required the following information on the motor rating plate and in motor documentation:

- Lowest nominal efficiency at 100%, 75% and 50% rated load
- Efficiency level (IE2, IE3 or IE4)
- Year of manufacture

These requirements were relaxed by amendment EU 4/2014 for small motors where the rating plate is too small to accommodate the full set of figures. In such cases manufacturers are now allowed to show only the efficiency for 100% rated load.

ABB and EU MEPS

At ABB we have long spoken out in favor of efforts to boost energy efficiency and reduce emissions. We play an active role in organizations that set efficiency standards, and we are happy to see MEPS being adopted in more and more countries around the world. We hope the authorities will maintain the momentum and take MEPS forward. IEC standards move fast, and active work is needed to bring the scope of EU MEPS into line with IEC/EN 60034-30-1. EU MEPS has an important role to play in helping European industry to maintain and grow its competitiveness.

Markings and documentation

From Januray 1st 2015 the stage 2 requirements for EU MEPS allow IE2 motors to be used only when they are fed by a VSD. These motors (7,5-375kW) must be marked so that the compulsory need to be used with a drive becomes evident. ABB uses the following stickers for the marking.

General information
Mounting arrangements

Foot-mounted motor

Code I / code II						**Product code pos. 12**
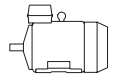	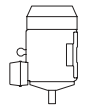	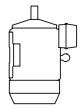	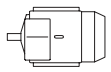	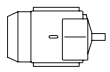	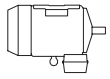	A: foot-mounted, term.box top R: foot-mounted, term.box RHS L: foot-mounted, term.box LHS
IM B3	IM V5	IM V6	IM B6	IM B7	IM B8	
IM 1001	IM 1011	IM 1031	IM 1051	IM 1061	IM 1071	

Flange-mounted motor, large flange

Code I / code II						**Product code pos. 12**
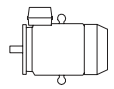	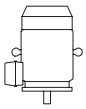	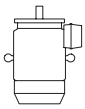	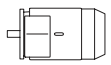	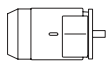	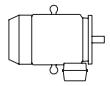	B: flange mounted, large flange
IM B5	IM V1	IM V3	*)	*)	*)	
IM 3001	IM 3011	IM 3031	IM 3051	IM 3061	IM 3071	

Flange-mounted motor, small flange

Code I / code II						**Product code pos. 12**
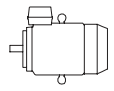	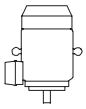	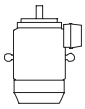	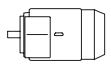	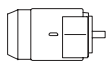	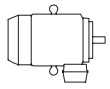	C: flange mounted, small flange
IM B14	IM V18	IM V19	*)	*)	*)	
IM 3601	IM 3611	IM 3631	IM 3651	IM 3661	IM 3671	

Foot- and flange-mounted motor with feet, large flange

Code I / code II						**Product code pos. 12**
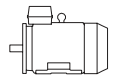	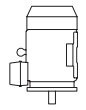	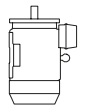	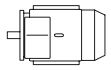	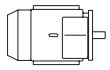	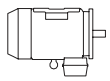	H: foot/flange-mounted, term. box top S: foot/flange-mounted, term. box RHS T: foot/flange-mounted, term. box LHS
IM B35	IM V15	IM V35	*)	*)	*)	
IM 2001	IM 2011	IM 2031	IM 2051	IM 2061	IM 2071	

Foot- and flange-mounted motor with feet, small flange

Code I / code II						**Product code pos. 12**
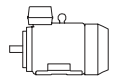	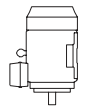	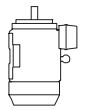	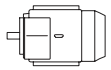	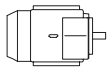	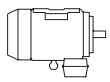	J: foot/flange-mounted, small flange
IM B34	IM V17					
IM 2101	IM 2111	IM 2131	IM 2151	IM 2161	IM 2171	

Foot-mounted motor, shaft with free extensions

Code I / code II						**Product code pos. 12**
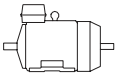	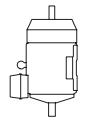	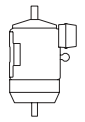	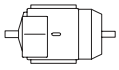	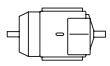	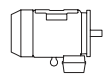	
IM 1002	IM 1012	IM 1032	IM 1052	IM 1062	IM 1072	

*) Not stated in IEC 60034-7.
Note: If the motor is mounted shaft upwards, take measures to prevent water or any other liquid from running down the shaft into the motor.

General information
Cooling

Designation system concerning methods of cooling refers to standard IEC 60034-6.

Explanation of the product code

International Cooling	Circuit arrangement	Primary coolant	Method of movement of primary coolant	Secondary coolant	Method of movement of secondary coolant
IC	4	(A)	1	(A)	6
	1	2	3	4	5

Position 1

0:	Free circulation (open circuit)
4:	Free circulatio (open circuit)

Position 2

A:	For air (omitted for simplifi ed designation)

Position 3

0:	Free convection
1:	Self-circulation
6:	Machine-mounted independent component

Position 4

A:	For air (omitted for simplifi ed designation)
W:	For water

Position 5

0:	Free convection
1:	Self-circulation
6:	Machine-mounted independent component
8:	Relative displacement

General information
Degrees of protection: IP code/IK code

Classification of degrees of protection provided by enclosures of rotating machines are refers to:

- Standard IEC 60034-5 or EN 60529 for IP code
- Standard EN 50102 for IK code

IP protection

Protection of persons against getting in contact with (or approaching) live parts and against contact with moving parts inside the enclosure. Also protection of the machine against ingress of solid foreign objects. Protection of machines against the harmful effects due to the ingress of water.

Explanation of the IP code

Ingress protection	Degree of protection to persons and to parts of the motors inside the enclosure	Degree of protection provided by the enclosure with respect to harmful effects due to ingress of water
IP	5	5
	1	2

Position 1	
2:	Motors protected against solid objects greater than 12 mm
4:	Motors protected against solid objects greater than 1 mm
5:	Dust-protected motors
6:	Dust-tight motors

Position 2	
3:	Motors protected against spraying water
4:	Motors protected against splashing water
5:	Motors protected against water jets
6:	Motors protected against heavy seas

IK code

Classification of degrees of protection provided by enclosure for motors against external mechanical impacts.

Explanation of the IK code

International mechanical protection	Characteristic group
IK	08
	1

Position 1	
Relation between IK code and impact energy:	
IK code	Impact energy/Joule
0:	Not protected according to EN 50102
01:	0.15
02:	0.2
03:	0.35
04:	0.5
05:	0.7
06:	1
07:	2
08:	5 (ABB Standard)
09:	10
10:	20

General information
Insulation

ABB uses class F insulation, which, with temperature rise B, is the most common requirement among industry today.

The use of class F insulation with class B temperature rise gives ABB products a 25 °C safety margin. This can be used to increase the loading for limited periods, to operate at higher ambient temperatures or altitudes, or with greater voltage and frequency tolerances. It can also be used to extend insulation. For instance, a 10 K temperature reduction will extend the insulation life.

Thermal class 130 (B)
- Nominal ambient temperature 40 °C
- Max permissible temperature rise 80 K
- Hot spot temperature margin 10 K

Thermal class 155 (F)
- Nominal ambient temperature 40 °C
- Max permissible temperature rise 105 K
- Hot spot temperature margin 10 K

Thermal class 180 (H)
- Nominal ambient temperature 40 °C
- Max permissible temperature rise 125 K
- Hot spot temperature margin 10 K

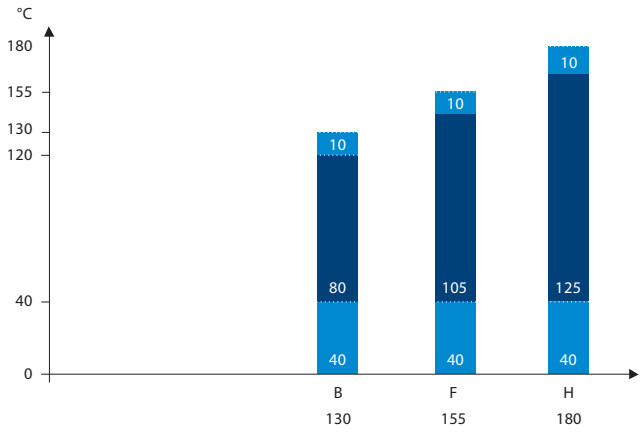

Safety margins per thermal class

General information
Voltage and frequency

The impact on temperature rise caused by voltage and frequency fluctuation is defined in IEC 60034-1. The standard divides the combinations into two zones, A and B. Zone A is the combination of voltage deviation of +/-5 % and frequency deviation of +/-2 %. Zone B is the combination of voltage deviation of +/-10 % and frequency deviation of +3/-5 %. This is illustrated in figure below.

Motors are capable of supplying the rated torque in both zones A and B, but the temperature rise will be higher than at rated voltage and frequency. Motors can be run in zone B only for a short period of time.

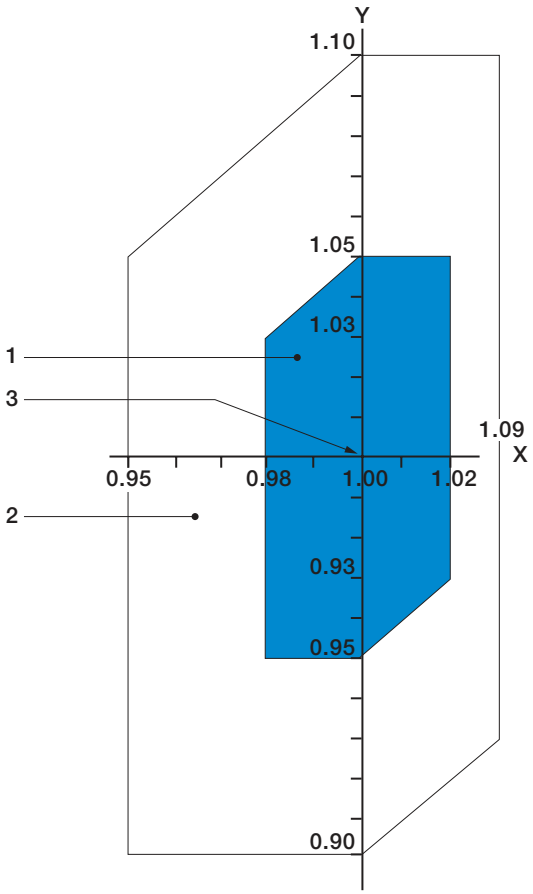

Figure Voltage and frequency deviation in zones A and B.

Key	
X axis	frequency p.u.
Y axis	voltage p.u.
1	zone A
2	zone B (outsice zone A
3	rating point

General information
Surface treatment

The surface treatment categorization of ABB motors is based on the ISO 12944 standard. ISO 12994-5 divides paint system durability into three categories: low (L), medium (M), and high (H). Low durability corresponds to a lifetime of 2 - 5 years, medium to 5 – 15 years, and high durability to over 15 years.

The durability range is not a guaranteed lifetime. Its purpose is to help the owner of the motor plan for appropriate maintenance intervals. More frequent maintenance may be required because of fading, chalking, contamination, wear and tear, or for other reasons.

ABB's standard surface treatment is corrosivity category C3, durability range M (which equal to medium corrosivity and medium durability). Special surface treatment is available in corrosivity categories C4 and C5-M, durability class M for both. In addition, surface treatment according to the NORSOK standard for offshore environments is available as an option.

The standard ABB paint color for motors is Munsell blue 8B 4.5/3.25.

Corrosivity category	Outdoor atmospheres	Indoor atmospheres	Use in ABB motors
C1, very low	Not used	Heated buildings with clean atmospheres	Not available
C2, low	Atmospheres with low level pollution, mostly rural areas.	Unheated buildings where condensation may occur, such as depots and sports halls.	Not available
C3, medium	Urban and industrial atmospheres, moderate sulfur dioxide pollution. Coastal areas withlow salinity.	Production rooms with high humidity and some air pollution; food processing plants,laundries, breweries, dairies.	Standard treatment
C4, high	Industrial areas and coastal areas with moderate salinity.	Chemical plants, swimming pools, coastalship- and boatyards.	Optional treatment for cast iron motors, variant code 115
C5-I, very high (industrial)	Industrial areas and coastal areas with high humidity and aggressive atmosphere.	Buildings or areas with nearly permanent condensation and high pollution.	Not available
C5-M, very high (marine)	Coastal and offshore areas with high salinity.	Buildings or areas with nearly permanent condensation and high pollution.	Optional treatment for cast iron motors, variant code 754, 711

Atmospheric corrosivity categories and recommended environments.

Variable speed drives with Process performance motors

Squirrel cage induction motors offer excellent availability, reliability and efficiency. With a variable speed drive (VSD) – a frequency converter – the motor performance can be further improved. Instead of running the motor continuously at full speed, the VSD enables speed adjustment according to actual need. The VSD makes it possible to control the process accurately and in some cases even to improve the capacity of the process by operating at higher than nominal speeds.

In contrast with conventional applications operating with a direct-on-line (DOL) supply, a VSD makes smooth starting possible. This significantly reduces the stress on the motor and driven application. Smooth starting also means that the supply network will not be affected by high starting current transients, a fact that can be taken into account in the design of the network.

The use of ABB industrial drives together with Process performance motors usually provides substantial energy savings as the speed and therefore the power required by the process can be optimized.

Process performance motors are designed for both DOL and variable speed operation. A wide range of options is available, so motors can be adapted to the most demanding applications.

When selecting Process performance motors for VSDs, the following points must be taken into consideration.

1. Dimensioning

The voltage (or current) fed by the VSD is not purely sinusoidal. This may increase motor losses, vibration, and noise level. Further, a change in the distribution of losses may affect the motor's temperature rise. In each case, the motor must be correctly sized according to the instructions supplied for the frequency converter.

ABB's DriveSize program utilizes dimensioning rules that are based on comprehensive motor and drive type tests. Please use DriveSize for selecting the correct motor and drive combination for a desired load profile.

In case of manual dimensioning, note that the loadability (or load capacity) curves provided in this catalog and in the respective manuals are indicative only. Values for a specific motor and drive are available on request.

In addition to thermal dimensioning, an adequate torque margin must be maintained for stability. The maximum torque of the motor must be at least 30 % higher than the load torque over the whole duty range. Voltage drop in the supply cable must also be taken into consideration, especially in cases where long supply cables are needed.

2. Operating speed, vibrations and shaft seals

Process performance motors are designed to work over a wide speed range and also at significantly higher than nominal speeds. The maximum speeds can be found on motor rating plates or in DriveSize. In addition to motor speed, make sure that the maximum or critical speed of the entire application is not exceeded.

If a particularly low level of vibration is required, motors with improved balancing (variant code 417) should be used.

In high speed applications, the use of labyrinth seals (variant code 783) instead of V rings should be considered.

Guideline maximum speed values for Process performance motors are shown in Table 1.

	Maximum speed, r/min	
Motor size	2-pole motors	4-pole motors
71-80	6000	4000
90-100	6000	6000
112-200	4500	4500
225-250	3600	3600
280	3600	2000
315	3600	2200
355 SM, ML, LKA	3600	2200
355 LKB	3000	2200
400	3600	2200
450	3000	2200

Table 1. Guideline maximum speed values for Process performancecast iron motors.

3. Ventilation

When the motor is operated at low speeds, the cooling capacity of the fan decreases, which again reduces the motor's load capacity. A separate constant speed fan (variant codes 183, 422, 514) can be used to increase cooling capacity.

At high speeds, the use of metal fans (variant code 068) instead of plastic ones should be considered. If a low noise level is required, unidirectional low-noise fans (variant codes 044 and 045) are recommended

4. Lubrication

In variable speed applications, bearing temperature varies as a function of speed and motor load. In such cases, the most accurate relubrication intervals can be obtained by measuring the bearing temperature under normal operating conditions. If the measured temperature is higher than +80 °C, the relubrication intervals specified on the lubrication plate or in the maintenance manual must be shortened, or lubricants suitable for high operating temperatures must be used. See ABB low voltage motor manual.

In case of continuous operation at very low speeds and at very low temperatures (below -20 °C), the lubrication properties of standard greases may not be sufficient, and special greases with additives are needed.

Operating temperatures also affect bearing life. When motors are equipped with sealed bearings, that is, bearings greased for life, it must be noted that if the operating temperature differs from the design temperature, the bearing life will also be different. More information on bearing lifetimes can be found in section Mechanical design of this catalog and in the relevant manuals.

The use of so-called conductive greases for elimination of bearing currents is not recommended because of their poor lubrication characteristics and low conductivity.

5. Winding insulation

To ensure that motors operate reliably, the effects of non-sinusoidal output voltages from the converter must be taken into consideration when selecting the correct insulation system for the motor and output filters for the converter.

Insulation and filters must be selected according to Table 2.

Winding insulation and filters required	
$U_N \leq 500$ V	Standard insulation
$U_N \leq 600$ V	Standard insulation + dU/dt filters OR Special insulation (variant code 405)
$U_N \leq 690$ V	Special insulation (variant code 405) AND dU/dt-filters at converter output
600 V < $U_N \leq 690$ V cable length > 150 m	Special insulation (variant code 405)

Table 2. Selection of motor winding insulation and converter output filters

For more information on dU/dt filters, see the relevant ABB drives catalogs.

For other converters and cases where the guidelines shown in Table 2 cannot be applied, selection must be based on the voltages present at motor terminals.

The allowed phase-to-ground voltage peaks at motor terminals:

- 1300 V peak:standard insulation
- 1800 V peak: special insulation, variant code 405

The maximum allowed phase-to-phase voltage peaks at the motor terminals as a function of pulse rise time are shown in Figure 1. The higher curve, Special insulation, applies to motors with special winding insulation for frequency converter supply, variant code 405. Standard insulation applies to motors with standard design

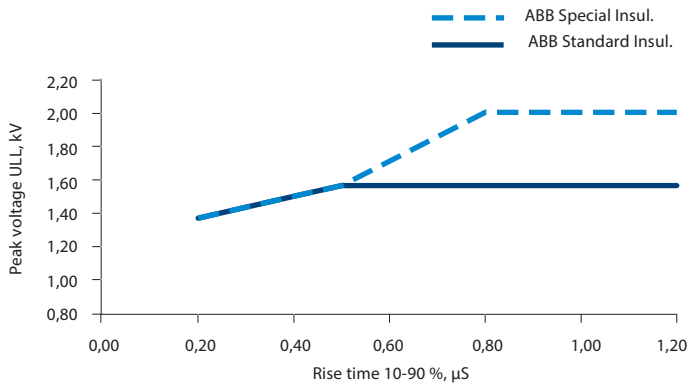

Figure 1. Maximum allowed phase-to-phase voltage peaks at motor terminals, as a function pulse rise time

6. Bearing currents

Bearing voltages and currents must be avoided in all motors to ensure reliable operation of the entire application. With ACS800 or ACS550 drives and uncontrolled DC voltage, insulated bearings (variant code 701) and/or properly dimensioned filters at the converter must be used, as indicated in Table 3. For information on other converter types, contact ABB Sales. When ordering, clearly state which alternative will be used.

Nominal power (P_N and / or Frame size (IEC)	Precautionary measures
P_N < 100 kW	No action needed
$P_N \geq 100$ kW OR IEC 315 ≤ Frame size ≤ IEC 355	Insulated non-drive end bearing
$P_N \geq 350$ kW OR IEC 400 ≤ Frame size ≤ IEC 450	Insulated non-drive end bearing AND Common mode filter at the converter

Table 3. Precautionary measures to avoid bearing currents in variable speed drives

For more information on bearing currents, see “Technical guide No. 5, Bearing currents in modern AC drive systems”.

Common mode filters

Common mode filters reduce common mode currents and so decrease the risk of bearing currents. Common mode filters do not significantly affect the phase of main voltages on motor terminals. For more information, see ABB drives catalogs.

Insulated bearings

ABB uses bearings with insulated inner or outer races. Hybrid bearings, that is, bearings with non-conductive ceramic rolling elements, can also be used in special applications.

7. Cabling, grounding, and EMC

The use of a variable speed drive sets higher demands on the cabling and grounding of the drive system. The motor must be cabled using shielded symmetrical cables and cable glands providing 360° bonding (EMC glands, variant code 704). For motors up to 30 kW, asymmetrical cables can be used, but shielded cables are always recommended, especially if there are sensitive components in the driven application.

For motor sizes IEC 280 and above, additional potential equalization is needed between the motor frame and the machinery, unless the motor and the driven machine are installed on a common steel base. When a steel base is used for potential equalization, high frequency conductivity of the connection must be checked.

To meet EMC requirements, special EMC cables must be used in addition to appropriate cable gland mounting with special earthing pieces. Refer to ABB drives manuals for more information.

8. Motor loadability with frequency converter drives

The loadability curves shown in Figures 2 and 3 are indicative guidelines and do not present exact values. These loadability curves can also be used for preliminary dimensioning of motors used at frequency converter duty, but it must be noted that the harmonic content and control algorithms vary between frequency converters, so the motor temperature rise will also be different.

The curves show the maximum continuous load torque as a function of frequency (speed), which results in the same temperature rise as operation with the rated sinusoidal supply at nominal frequency and full rated load.

Normally, Process performance motors operate according to class B temperature rise. For these motors, dimensioning should be done according to temperature rise B curve, or the motor can be slightly overloaded. In other words, it can be dimensioned according to temperature rise F curve.

However, if only class F temperature rise with a sinusoidal supply is indicated for the motor in the technical data section, dimensioning must be done according to the temperature rise curve B.

If the motor is loaded according the temperature rise F curve, it will be necessary to check the temperature rise in other parts of the motor and ensure that the lubrication intervals and grease type are still appropriate.

Temperature rise B

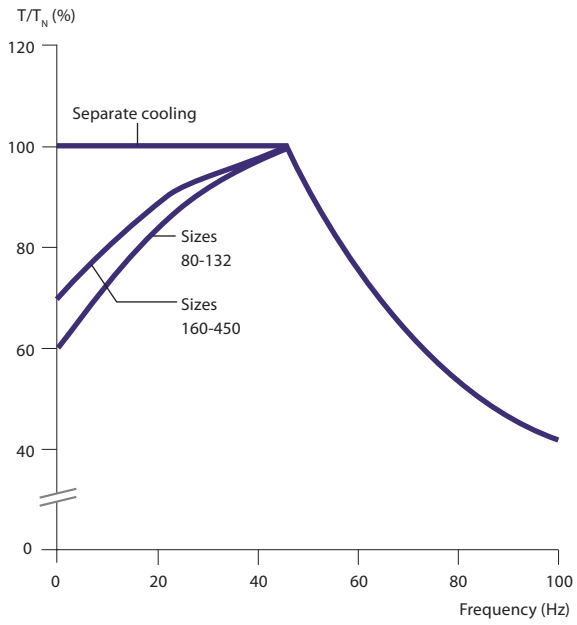

Figure 2a. Loadability curves for frequency converters with DTC control

Temperature rise F

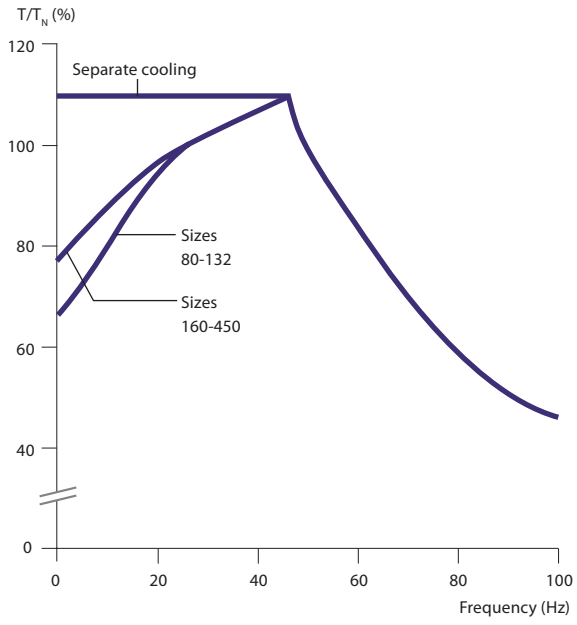

Figure 3a. Loadability curves for frequency converters with DTC control

Temperature rise B

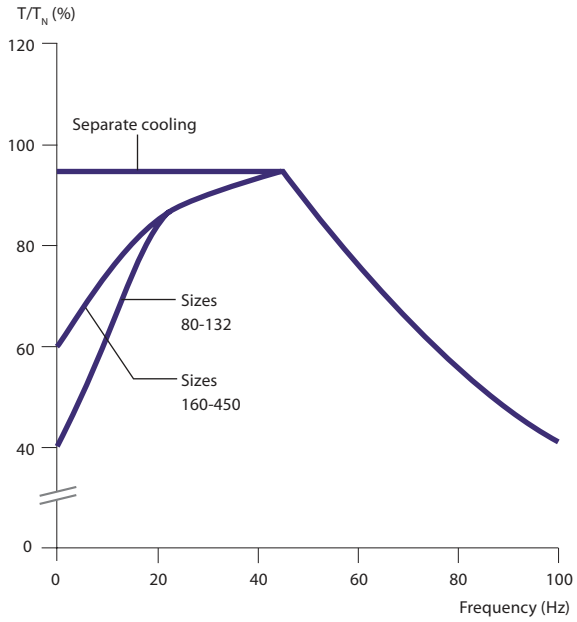

Figure 2b. Loadability curves for other frequency converters

Temperature rise F

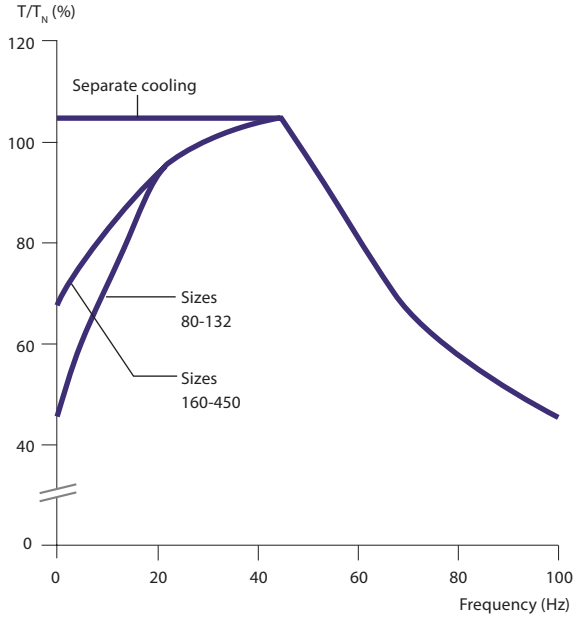

Figure3b. Loadability curves for other frequency converters

Low voltage Process performance cast iron motors
Sizes 71 to 450, 0.09 to 1000 kW

Ordering information 20

Rating plates 21

Technical data IE2 22
3000 r/min motors . . . 22
1500 r/min motors . . . 24
1000 r/min motors . . . 26
750 r/min motors . . . 28
600 and 500 r/min motors . . . 30

Technical data IE3 31
3000 r/min motors . . . 31
1500 r/min motors . . . 33
1000 r/min motors . . . 35

Technical data IE4 37
3000, 1500, 1000 r/min motors . . . 37

Variant codes 38

Mechanical design 43
Motor frame and drain holes . . . 43
Bearings . . . 45
Terminal box . . . 55

Dimension drawings 65
Motor sizes 71 - 132 . . . 65
Motor sizes 160 - 250 . . . 67
Motor sizes 280 - 315 . . . 69
Motor sizes 355 - 450 . . . 71

Accessories 73
Built-in brake . . . 73
Separate cooling . . . 75
Silencer . . . 76
Slide rails . . . 77

Cast iron motors in brief 79
Motor sizes 71 - 132 . . . 79
Motor sizes 160 - 250 . . . 80
Motors sizes 280 - 450 . . . 81

Motor construction 82

Ordering information

Explanation of the product code

Motor type	Motor size	Product code	Mounting arrangement code, Voltage and frequency code, Generation code	Variant codes
M3BP	160MLC	3GBP 161 033	- ADG	003, etc.
		1 2 3 4 5 6 7	8 9 10 11 12 13 14	

When placing an order, specify motor type, size and product code according to the following example.

Example	
Motor type	M3BP 160 MLC
Pole number	2
Mounting arrangement (IM-code)	IM B3 (IM 1001)
Rated output	18.5 kW
Product code	3GBP161033-ADG
Variant codes if needed	

Positions 1 to 4

3GBP:	Totally enclosed fan cooled squirrel cage motor with cast iron frame
Positions 5 and 6	
IEC size	
07:	71
08:	80
09:	90
10:	100
12:	112
13:	132
16:	160
18:	180
20:	200
22:	225
25:	250
28:	280
31:	315
35:	355
40:	400
45:	450

Position 7

Speed (Pole pairs)	
1:	2 poles
2:	4 poles
3:	6 poles
4:	8 poles
5:	10 poles
6:	12 poles
7:	> 12 poles
8:	Two-speed motors for fan drive motors for constant torque
9:	Multi-speed motors, two-speed

Positions 8 to 10

Serial number

Position 11

-(dash)

Position 12 (marked with black dot in data tables)

Mounting arrangement	
A:	Foot-mounted, top-mounted terminal box
R:	Foot-mounted, terminal box RHS seen from D-end
L:	Foot-mounted, terminal box LHS seen from D-end
B:	Flange-mounted, large flange
C:	Flange-mounted, small flange (sizes 71 to 112)
H:	Foot- and flange-mounted, terminal box top-mounted
J:	Foot- and flange-mounted, small flange with tapped holes
S:	Foot- and flange-mounted, terminal box RHS seen from D-end
T:	Foot- and flange-mounted, terminal box LHS seen from D-end
V:	Flange-mounted, special flange
F:	Foot- and flange-mounted. Special flange

Position 13 (marked with black dot in data tables)

Voltage and frequency	
Single-speed motors	
B:	380 VΔ 50 Hz
D:	400 VΔ, 415 VΔ, 690 VY 50 Hz
E:	500 VΔ 50 Hz
F:	500 VY 50 Hz
S:	230 VΔ, 400 VY, 415 VY 50 Hz
T:	660 VΔ 50 Hz
U:	690 VΔ 50 Hz
X:	Other rated voltage, connection or frequency, 690 V maximum
Two-speed motors	
A:	220 V 50 Hz
B:	380 V 50 Hz
D:	400 V 50 Hz
E:	500 V 50 Hz
S:	230 V 50 Hz
X:	Other rated voltage, connection or frequency, 690 V maximum
Remark:	For voltage code X the variant code “209 Non-standard voltage or frequency (special winding)” must be ordered.

Position 14

Generation code

A, B, C...G...K: The product code must be, if needed, followed by variant codes.

Efficiency values are given according to IEC 60034-2-1; 2014

For detailed dimension drawings please see our web-pages ‘www.abb.com/motors&generators’ or contact ABB.

Rating plates

The motor's main rating plate shows the motor's performance values with various connections at nominal speed. The rating plate also shows the efficiency level (IE2, IE3, or IE4), year of manufacture, and the lowest nominal efficiency at 100, 75, and 50 % nominal load.

The plate samples shown on this page present typical data rows. The actual content of the plate may vary according to your order and according to the motor's IE class.

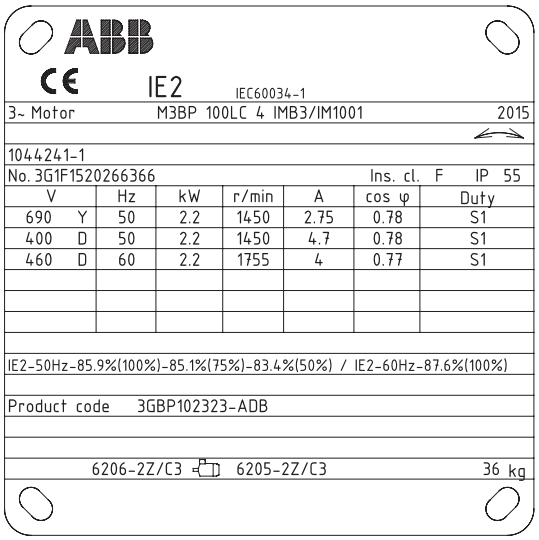

Rating plate example, motor size 100, IE2

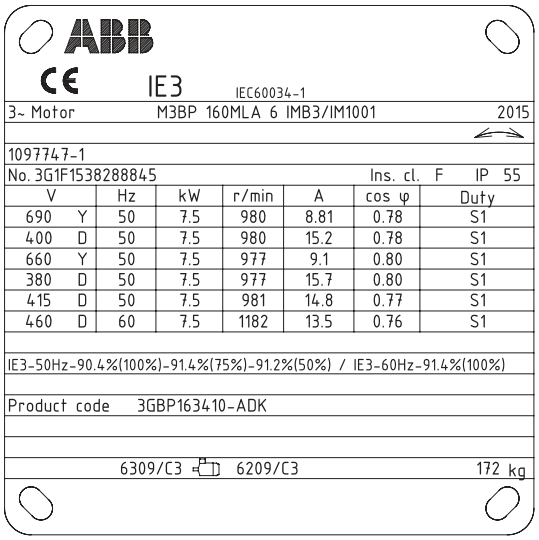

Rating plate example, motor size 160, K generation, IE3

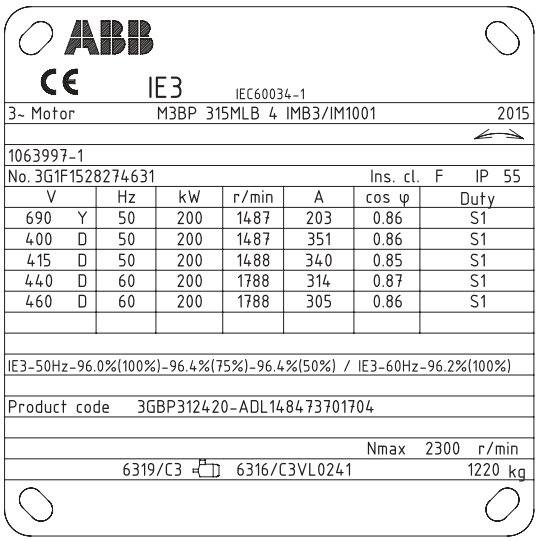

Rating plate example, motor size 315, L generation, IE3

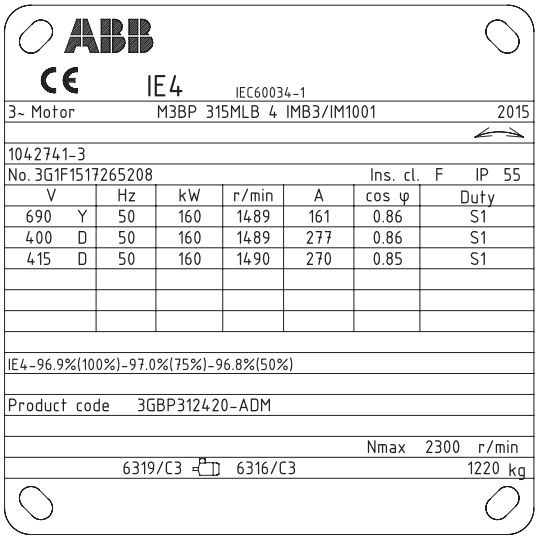

Rating plate example, motor size 315, IE4

Technical data
IE2 cast iron motors, 3000 r/min

IP 55 - IC 411 - Insulation class F, temperature rise class B
IE2 efficiency class according to IEC 60034-30-1; 2014

Output kW		Motor type	Product code	Speed r/min	Efficiency IEC 60034-30-1; 2014 Full load 100%	3/4 load 75%	1/2 load 50%	Power factor Cosφ	Current I_N A	I_S/I_N	Torque T_N Nm	T_l/T_N	T_b/T_N	Moment of inertia J = 1/4 GD²kgm²	Weight kg	Sound pressure Level L_{PA} dB
3000 r/min = 2 poles					400 V 50 Hz				CENELEC-design							
0.37		M3BP 71MA 2	3GBP071321-••B	2768	74,8	75,4	72,4	0,78	0,9	4,5	1,3	2,2	2,3	0,000390	11	58
0.55		M3BP 71MB 2	3GBP071322-••B	2813	77,8	78,3	76,0	0,79	1,3	4,3	1,9	2,4	2,5	0,000510	11	56
0.75		M3BP 80MB 2	3GBP081322-••B	2895	80,6	79,6	75,6	0,74	1,8	7,7	2,4	4,2	4,2	0,00100	16	57
1.1		M3BP 80MC 2	3GBP081323-••B	2870	81,8	81,7	78,9	0,80	2,4	7,5	3,6	3,7	4,6	0,00120	18	60
1.5		M3BP 90SLB 2	3GBP091322-••B	2900	82,2	82,9	81,3	0,87	3,3	7,5	4,9	2,5	2,6	0,00254	24	69
2.2		M3BP 90SLC 2	3GBP091323-••B	2885	84,7	86,8	85,7	0,88	4,2	6,8	7,2	1,9	2,5	0,00280	25	64
3		M3BP 100LB 2	3GBP101322-••B	2925	85,2	84,9	82,7	0,87	5,8	9,1	9,7	3,1	3,5	0,00528	36	68
4		M3BP 112MB 2	3GBP111322-••B	2895	86,1	87,0	86,6	0,89	7,5	8,1	13,1	2,9	3,2	0,00575	37	70
5.5		M3BP 132SMB 2	3GBP131322-••B	2865	87,7	88,4	87,7	0,86	10,0	7,0	18,3	2,0	2,7	0,0128	68	70
7.5		M3BP 132SMC 2	3GBP131324-••B	2890	88,2	88,5	87,5	0,88	13,7	7,3	24,9	2,0	3,6	0,0136	70	70
11		M3BP 160MLA 2	3GBP161410-••G	2938	90,6	91,5	91,1	0,90	19,2	7,5	35,7	2,4	3,1	0,0440	127	69
15		M3BP 160MLB 2	3GBP161420-••G	2934	91,5	92,4	92,2	0,90	26,0	7,5	48,8	2,5	3,3	0,053	141	69
22		M3BP 180MLA 2	3GBP181410-••G	2952	92,2	92,7	92,2	0,87	23,8	7,1	71,1	2,8	3,3	0,076	190	69
37		M3BP 200MLB 2	3GBP201420-••G	2959	93,4	93,7	92,9	0,90	63,5	8,2	119	3,0	3,3	0,20	298	72
45		M3BP 225SMA2	3GBP221210-••G	2961	93,6	93,9	93,1	0,88	78,8	6,7	145	2,5	2,5	0,24	347	74
55		M3BP 250SMA 2	3GBP251210-••G	2967	94,1	94,4	93,8	0,88	95,8	6,8	177	2,2	2,7	0,51	405	75
75		M3BP 280SMA 2	3GBP281210-••G	2978	94,3	94,1	92,8	0,88	130	7,6	240	2,1	3,0	0,80	625	77
90	3)	M3BP 280SMB 2	3GBP281220-••G	2976	94,6	94,7	93,8	0,89	154	7,4	288	2,1	2,9	0,90	665	77
110	3)	M3BP 315SMA 2	3GBP311210-••G	2982	94,9	94,4	92,9	0,86	197	7,4	352	2,2	3,2	1,20	940	78
132		M3BP 315SMB 2	3GBP311220-••G	2982	95,1	94,8	93,6	0,88	227	7,4	422	2,2	3,0	1,40	940	78
160	3)	M3BP 315SMC 2	3GBP311230-••G	2981	95,4	95,2	94,2	0,89	271	7,5	512	2,3	3,0	1,70	1025	78
200	3)	M2BP 315MLA 2	3GBP311410-••G	2980	95,7	95,7	94,9	0,90	335	7,7	640	2,6	3,0	2,10	1190	78
250	3)	M3BP 355SMA 2	3GBP351210-••G	2984	95,7	95,5	94,5	0,89	423	7,7	800	2,1	3,3	3,00	1600	83
315	3)	M3BP 355SMB 2	3GBP351220-••G	2980	95,7	95,6	95,0	0,89	531	7,0	1009	2,1	3,0	3,40	1680	83
355	3)	M3BP 355SMC 2	3GBP351230-••G	2984	95,7	95,7	94,9	0,88	603	7,2	1136	2,2	3,0	3,60	1750	83
400	3)	M3BP 355MLA 2	3GBP351410-••G	2982	96,9	96,6	95,9	0,88	677	7,1	1280	2,3	2,9	4,10	2000	83
450	3)	M3BP 355MLB 2	3GBP351420-••G	2983	97,1	97,0	96,4	0,90	743	7,9	1440	2,2	2,9	4,30	2080	83
500	3)	M3BP 355LKA 2	3GBP351810-••G	2982	96,9	96,9	96,5	0,90	827	7,5	1601	2,0	3,9	4,80	2320	83
560	3)	M3BP 400LA 2	3GBP401510-••G	2988	97,2	97,2	96,6	0,89	934	7,8	1789	2,5	3,7	7,90	2950	82
560	3)	M3BP 355LKB 2	3GBP351820-••G	2983	97,0	97,0	96,5	0,90	925	8,0	1792	2,2	4,1	5,20	2460	83
630	2)	M3BP 400LB 2	3GBP401520-••G	2987	97,4	97,2	96,7	0,89	1049	7,6	2014	2,6	3,7	8,20	3050	82
710	2)	M3BP 400LC 2	3GBP401530-••G	2987	97,5	97,4	96,9	0,89	1178	7,2	2270	2,6	3,4	9,30	3300	82
800	1) 2)	M3BP 450LA 2	3GBP451510-••G	2990	97,4	97,2	96,6	0,87	1362	7,8	2555	1,3	3,4	12,20	4000	85
900	1) 2)	M3BP 450LB 2	3GBP451520-••G	2990	97,0	96,8	96,2	0,87	1534	7,6	2874	1,5	3,1	13,50	4200	85

1) Temperature rise class F
2) Undirectional fan, variant code 044 or 045 is mandatory
3) 3dB(A) sound pressure level reduction with unidirectional fan construction. Direction of rotation must be stated when ordering, see variant codes 044 and 045

Technical data
IE2 cast iron motors, 3000 r/min

IP 55 - IC 411 - Insulation class F, temperature rise class B
IE2 efficiency class according to IEC 60034-30-1; 2014

Output kW		Motor type	Product code	Speed r/min	Efficiency IEC 60034-30-1; 2014 Full load 100%	3/4 load 75%	1/2 load 50%	Power factor Cosφ	Current I_N A	I_s/I_N	Torque T_N Nm	T_l/T_N	T_b/T_N	Moment of inertia J = 1/4 GD²kgm²	Weight kg	Sound pressure Level L_{PA} dB
3000 r/min = 2 poles					400 V 50 Hz				High-output design							
22		M3BP 160MLD 2	3GBP161440-••G	2933	91,7	92,8	92,8	0,90	38,0	8,1	71,6	3,2	3,6	0,0630	170	69
27		M3BP 160MLE 2	3GBP161450-••G	2939	92,2	93,1	93,0	0,90	46,4	8,8	87,7	3,4	3,8	0,0720	184	69
30		M3BP 180MLB 2	3GBP181420-••G	2950	92,7	93,5	93,3	0,88	53,0	7,9	97,1	2,8	3,3	0,0920	208	69
45	1)	M3BP 200MLC 2	3GBP201430-••G	2957	93,3	93,8	93,2	0,88	79,1	8,1	145	3,1	3,3	0,196	298	72
55	1)	M3BP 200MLD 2	3GBP201440-••G	2953	93,8	94,4	94,3	0,89	95,0	7,8	177	2,9	3,3	0,217	314	72
55		M3BP 225SMB 2	3GBP221220-••G	2961	93,9	94,3	93,6	0,88	96,0	6,5	177	2,4	2,5	0,274	369	74
75	1)	M3BP 225SMC 2	3GBP221230-••G	2969	94,4	94,6	94,0	0,84	136	7,4	241	3,2	3,1	0,309	396	74
75		M3BP 250SMB 2	3GBP251220-••G	2970	94,5	94,8	94,4	0,89	128	7,6	241	2,8	3,1	0,583	451	75
80	1)	M3BP 225SMD 2	3GBP221240-••G	2964	94,4	94,8	94,3	0,87	140	7,3	257	3,0	2,8	0,329	410	74
90	1)	M3BP 250SMC 2	3GBP251230-••G	2971	94,9	95,2	94,8	0,89	153	7,6	289	2,5	3,1	0,644	487	75
110	3)	M3BP 280SMC 2	3GBP281230-••G	2978	95,1	95,1	94,5	0,90	186	7,9	352	2,4	3,0	1,15	725	77
132	3)	M3BP 280MLA 2	3GBP281410-••G	2977	95,3	95,3	94,8	0,90	221	7,5	423	2,5	3,0	1,40	840	81
160	3)	M3BP 280MLB 2	3GBP281420-••G	2976	95,5	95,7	95,3	0,91	265	7,6	513	2,8	3,0	1,55	890	81
250	3)	M3BP 315LKA 2	3GBP311810-••G	2980	95,7	95,7	95,2	0,89	423	8,1	801	2,8	2,9	2,65	1440	78
315	3)	M3BP 315LKC 2	3GBP311830-••G	2981	95,7	95,7	95,4	0,89	533	8,8	1009	3,2	3,2	3,30	1630	78

1) Temperature rise class F

2) -3 dB(A) sound pressure level reduction with unidirectional fan construction. The direction of rotation of the fan must be stated when ordering, see variant codes 045 and 045.

Technical data
IE2 cast iron motors, 1500 r/min

IP 55 - IC 411 - Insulation class F, temperature rise class B
IE2 efficiency class according to IEC 60034-30-1; 2014

Output kW	Motor type	Product code	Speed r/min	Efficiency IEC 60034-30-1; 2014 Full load 100%	3/4 load 75%	1/2 load 50%	Power factor Cosφ	Current I_N A	I_S/I_N	Torque T_N Nm	T_l/T_N	T_b/T_N	Moment of inertia J = 1/4 GD²kgm²	Weight kg	Sound pressure Level L_{PA} dB
1500 r/min = 4 poles				400 V 50 Hz				CENELEC-design							
0.25	M3BP 71MA 4	3GBP072321-••B	1365	68,3	70,7	69,6	0,81	0,6	3,5	1,7	1,9	2,0	0,000740	10	45
0.37	M3BP 71MB 4	3GBP072322-••B	1380	72,4	74,5	74,7	0,83	0,9	4,6	2,5	1,6	2,1	0,000880	11	45
0.55	M3BP 80MA 4	3GBP082321-••B	1415	74,5	73,8	70,0	0,73	1,4	5,0	3,7	2,0	2,8	0,00144	15	45
0.75	M3BP 80MD 4	3GBP082324-••B	1430	81,0	81,0	78,2	0,73	1,8	5,3	5,0	2,7	3,2	0,00205	17	50
1.1	M3BP 90SLB 4	3GBP092322-••B	1435	83,6	84,1	82,4	0,80	2,4	6,5	7,3	2,4	3,4	0,00440	25	50
1.5	M3BP 90SLD 4	3GBP092325-••B	1430	84,3	85,1	83,9	0,83	3,0	6,3	10,0	2,7	3,4	0,00530	27	56
2.2	M3BP 100LC 4	3GBP102323-••B	1450	85,9	85,1	83,4	0,78	4,6	7,7	14,5	2,7	4,1	0,00948	36	56
3	M3BP 100LD 4	3GBP102324-••B	1450	86,8	86,9	85,3	0,79	6,1	7,7	19,8	2,9	3,4	0,0110	38	58
4	M3BP 112MB 4	3GBP112322-••B	1440	86,8	87,7	87,3	0,82	7,9	7,0	26,5	2,5	2,9	0,0125	44	59
5.5	M3BP 132SMB 4	3GBP132322-••B	1460	89,0	89,8	88,9	0,80	10,8	6,7	36,0	2,2	3,2	0,0328	70	67
7.5	M3BP 132SMC 4	3GBP132323-••B	1450	89,3	90,1	90,0	0,81	14,5	7,2	49,4	2,5	3,5	0,0366	73	64
11	M3BP 160MLA 4	3GBP162410-••G	1466	90,4	91,6	91,3	0,84	20,9	6,8	71,6	2,2	2,8	0,0810	135	62
15	M3BP 160MLB 4	3GBP162420-••G	1470	91,4	92,3	92,2	0,83	28,5	7,1	97,4	2,6	3,0	0,0990	165	62
18.5	M3BP 180MLA 4	3GBP182410-••G	1477	91,9	92,8	92,6	0,84	34,5	7,2	119	2,6	2,9	0,166	205	62
22	M3BP 180MLB 4	3GBP182420-••G	1475	92,3	93,3	93,2	0,84	40,9	7,3	142	2,6	3,0	0,195	222	62
30	M3BP 200MLA 4	3GBP202410-••G	1480	93,2	94,0	93,7	0,84	55,3	7,4	193	2,8	3,0	0,309	291	63
37	M3BP 225SMA 4	3GBP222210-••G	1479	93,4	93,9	93,4	0,84	68,0	7,1	238	2,6	2,9	0,356	324	66
45	M3BP 225SMB 4	3GBP222220-••G	1480	93,9	94,3	93,9	0,85	81,3	7,5	290	2,8	3,2	0,440	356	66
55	M3BP 250SMA 4	3GBP252210-••G	1480	94,4	94,9	94,6	0,85	98,9	7,0	354	2,6	2,9	0,765	414	67
75	M3BP 280SMA 4	3GBP282210-••G	1484	94,5	94,7	94,4	0,85	134	6,9	482	2,5	2,8	1,25	625	68
90	M3BP 280SMB 4	3GBP282220-••G	1483	94,7	95,0	94,5	0,85	160	7,2	579	2,5	2,7	1,50	665	68
110	M3BP 315SMA 4	3GBP312210-••G	1487	95,1	95,1	94,3	0,86	194	7,2	706	2,3	2,8	2,30	900	70
132	M3BP 315SMB 4	3GBP312220-••G	1487	95,4	95,4	94,7	0,86	232	7,1	847	2,3	2,7	2,60	960	70
160	M3BP 315SMC 4	3GBP312230-••G	1487	95,3	95,3	94,8	0,85	284	7,2	1027	2,4	2,9	2,90	1000	70
200	M3BP 315MLA 4	3GBP312410-••G	1486	95,6	95,6	95,3	0,86	351	7,2	1285	2,5	2,9	3,50	1160	70
250	M3BP 355SMA 4	3GBP352210-••G	1488	95,9	96,0	95,5	0,85	442	7,1	1604	2,3	2,7	5,90	1610	74
315	M3BP 355SMB 4	3GBP352220-••G	1488	95,9	96,2	95,8	0,86	550	7,3	2021	2,3	2,8	6,90	1780	74
355	M3BP 355SMC 4	3GBP352230-••G	1487	95,9	96,2	95,9	0,87	614	6,8	2279	2,4	2,7	7,20	1820	78
400	M3BP 355MLA 4	3GBP352410-••G	1489	96,3	96,3	95,9	0,85	705	6,8	2565	2,3	2,6	8,40	2140	78
450	M3BP 355MLB 4	3GBP352420-••G	1490	96,7	96,7	96,1	0,86	780	6,9	2884	2,3	2,9	8,40	2140	78
500	M3BP 355LKA 4	3GBP352810-••G	1490	97,0	97,0	96,5	0,86	865	6,8	3204	2,0	3,0	10,0	2500	78
560 [1]	M3BP 355LKB 4	3GBP352820-••G	1490	96,9	96,9	96,5	0,85	981	7,2	3588	2,6	2,7	10,6	2600	78
560 [1]	M3BP 400LA 4	3GBP402510-••G	1491	96,8	96,8	96,3	0,85	982	7,4	3586	2,4	2,8	15,0	3200	78
630	M3BP 400LB 4	3GBP402520-••G	1491	97,0	97,0	96,5	0,87	1077	7,6	4034	2,2	2,9	16,0	3300	78
710 [1]	M3BP 400LC 4	3GBP402530-••G	1491	97,1	97,1	96,7	0,86	1227	7,6	4547	2,4	3,0	17,0	3400	78
800	M3BP 450LA 4	3GBP452510-••G	1491	96,9	96,9	96,4	0,86	1396	7,0	5121	1,3	2,8	23,0	4050	85
900	M3BP 450LB 4	3GBP452520-••G	1492	97,1	97,0	96,5	0,86	1573	7,0	5761	1,3	2,8	25,0	4350	85
1000 [1]	M3BP 450LC 4	3GBP452530-••G	1491	97,2	97,2	96,7	0,86	1724	6,8	6404	1,3	2,7	30,0	4700	85

[1] Temperature rise class F

Technical data
IE2 cast iron motors, 1500 r/min

IP 55 - IC 411 - Insulation class F, temperature rise class B
IE2 efficiency class according to IEC 60034-30-1; 2014

Output kW		Motor type	Product code	Speed r/min	Efficiency IEC 60034-30-1; 2014 Full load 100%	3/4 load 75%	1/2 load 50%	Power factor Cosφ	Current I_N A	I_s/I_N	Torque T_N Nm	T_l/T_N	T_b/T_N	Moment of inertia J = 1/4 GD²kgm²	Weight kg	Sound pressure Level L_{PA} dB
1500 r/min = 4 poles					400 V 50 Hz				High-output design							
18.5		M3BP 160MLC 4	3GBP162430-••G	1469	91,4	92,4	92,2	0,84	34,7	7,6	120	3,0	3,2	0,110	173	62
22	1)	M3BP 160MLD 4	3GBP162440-••G	1463	91,6	93,0	93,2	0,85	40,7	6,9	143	2,5	2,9	0,125	187	62
30	1)	M3BP 180MLC 4	3GBP182430-••G	1474	92,3	93,5	93,5	0,83	56,5	7,3	194	2,7	2,9	0,217	235	62
37		M3BP 200MLB 4	3GBP202420-••G	1479	93,4	94,4	94,4	0,85	67,2	7,1	238	2,6	2,9	0,343	307	63
45	1)	M3BP 200MLC 4	3GBP202430-••G	1479	93,6	94,4	94,2	0,83	83,6	7,5	290	2,9	3,2	0,366	319	63
55		M3BP 225SMC 4	3GBP222230-••G	1478	94,0	94,6	94,4	0,85	99,3	7,4	355	2,9	3,1	0,474	370	66
64		M3BP 225SMD 4	3GBP222240-••G	1480	94,2	94,6	94,1	0,85	115	8,2	412	3,3	3,3	0,542	399	66
75	1)	M3BP 250SMB 4	3GBP252220-••G	1478	94,4	95,1	94,8	0,85	134	7,3	484	2,8	3,1	0,866	450	67
90	1)	M3BP 250SMC 4	3GBP252230-••G	1478	94,6	95,3	95,0	0,84	163	7,4	581	3,1	3,3	0,941	478	67
110		M3BP 280SMC 4	3GBP282230-••G	1485	95,1	95,4	95,1	0,86	193	7,6	707	3,0	3,0	1,85	725	68
132		M3BP 280MLA 4	3GBP282410-••G	1483	95,3	95,5	95,1	0,86	232	7,0	849	2,7	2,8	2,30	840	75
160		M3BP 280MLB 4	3GBP282420-••G	1484	95,6	95,9	95,7	0,85	284	7,4	1029	2,9	2,9	2,50	890	75
250		M3BP 315LKA 4	3GBP312810-••G	1487	95,7	95,8	95,2	0,85	443	7,4	1605	2,5	2,9	4,40	1410	78
280		M3BP 315LKB 4	3GBP312820-••G	1487	95,8	95,9	95,4	0,87	491	7,6	1798	2,6	3,0	5,00	1520	78
315		M3BP 315LKC 4	3GBP312830-••G	1488	95,8	95,9	95,3	0,86	559	7,8	2021	2,6	3,2	5,50	1600	78

1) Temperature rise class F

Technical data
IE2 cast iron motors, 1000 r/min

IP 55 - IC 411 - Insulation class F, temperature rise class B
IE2 efficiency class according to IEC 60034-30-1; 2014

Output kW	Motor type	Product code	Speed r/min	Efficiency IEC 60034-30-1; 2014 Full load 100%	3/4 load 75%	1/2 load 50%	Power factor Cosφ	Current I_N A	I_S/I_N	Torque T_N Nm	T_l/T_N	T_b/T_N	Moment of inertia J = 1/4 GD²kgm²	Weight kg	Sound pressure Level L_{PA} dB
1000 r/min = 6 poles				400 V 50 Hz				CENELEC-design							
0.18	M3BP 71MA 6	3GBP073321-••B	900	63,7	63,8	59,0	0,71	0,6	3,1	1,9	2,0	2,1	0,000890	10	42
0.25	M3BP 71MB 6	3GBP073322-••B	915	67,2	65,5	59,5	0,69	0,8	3,7	2,6	2,6	2,7	0,00110	12	42
0.37	M3BP 80MA 6	3GBP083321-••B	925	71,0	70,0	65,0	0,69	1,1	4,1	3,8	2,4	2,5	0,00187	15	47
0.55	M3BP 80MB 6	3GBP083322-••B	920	73,9	75,0	72,8	0,71	1,5	3,8	5,7	1,8	2,2	0,00239	17	47
0.75	M3BP 90SLC 6	3GBP093323-••B	960	78,7	77,2	72,5	0,58	2,3	4,5	7,4	2,4	3,1	0,00491	25	44
1.1	M3BP 90SLE 6	3GBP093324-••B	930	78,2	78,7	76,5	0,66	3,0	4,0	11,2	1,9	2,3	0,00540	28	44
1.5	M3BP 100L 6	3GBP103322-••B	950	82,2	83,0	81,6	0,69	3,7	4,3	15,0	1,5	2,7	0,00873	37	49
2.2	M3BP 112MB 6	3GBP113322-••B	950	82,5	83,7	81,6	0,69	5,5	4,4	22,1	1,7	2,3	0,0125	44	66
3	M3BP 132SMB 6	3GBP133321-••B	975	85,3	84,2	81,2	0,63	8,0	5,5	29,4	1,8	2,9	0,0334	69	57
4	M3BP 132SMC 6	3GBP133322-••B	960	84,9	85,3	83,9	0,68	10,0	4,6	39,7	1,5	2,2	0,0334	69	57
5.5	M3BP 132SMF 6	3GBP133324-••B	965	86,1	86,5	85,4	0,71	12,9	5,1	54,4	2,0	2,3	0,0487	86	57
7.5	M3BP 160MLA 6	3GBP163410-••G	975	88,5	89,9	89,7	0,79	15,4	7,4	73,4	1,7	3,2	0,087	134	59
11	M3BP 160MLB 6	3GBP163420-••G	972	89,3	90,6	90,5	0,79	22,5	7,5	108	1,9	2,9	0,114	172	59
15	M3BP 180MLA 6	3GBP183410-••G	977	90,2	91,2	90,7	0,76	31,5	5,8	146	1,8	2,7	0,168	207	59
18.5	M3BP 200MLA 6	3GBP203410-••G	988	91,6	92,2	91,7	0,80	36,4	6,7	178	2,3	2,9	0,382	269	63
22	M3BP 200MLB 6	3GBP203420-••G	987	92,0	92,9	92,7	0,82	42,0	6,6	212	2,2	2,8	0,448	291	63
30	M3BP 225SMA 6	3GBP223210-••G	986	92,6	93,3	92,8	0,83	56,2	7,0	290	2,6	2,9	0,663	349	63
37	M3BP 250SMA 6	3GBP253210-••G	989	93,1	93,8	93,4	0,82	69,9	6,8	357	2,4	2,7	1,13	395	63
45	M3BP 280SMA 6	3GBP283210-••G	990	93,4	93,8	93,5	0,83	83,8	7,0	434	2,5	2,5	1,85	605	66
55	M3BP 280SMB 6	3GBP283220-••G	990	93,8	94,2	93,9	0,84	100	7,0	530	2,7	2,6	2,20	645	66
75	M3BP 315SMA 6	3GBP313210-••G	992	94,4	94,4	93,5	0,82	139	7,4	721	2,4	2,8	3,20	830	70
90	M3BP 315SMB 6	3GBP313220-••G	992	94,8	94,7	94,1	0,84	166	7,5	866	2,4	2,8	4,10	930	70
110	M3BP 315SMC 6	3GBP313230-••G	991	95,0	95,0	94,6	0,83	201	7,4	1059	2,5	2,9	4,90	1000	70
132	M3BP 315MLA 6	3GBP313410-••G	991	95,3	95,4	94,9	0,83	240	7,5	1271	2,7	3,0	5,80	1150	68
160	M3BP 355SMA 6	3GBP353810-••G	992	94,9	95,2	95,0	0,83	293	6,3	1540	2,3	2,2	7,90	1520	75
200	M3BP 355SMB 6	3GBP353220-••G	993	95,7	95,9	95,7	0,83	364	7,2	1923	2,2	2,7	9,70	1680	75
250	M3BP 355SMC 6	3GBP353230-••G	993	95,7	95,8	95,4	0,82	460	7,4	2404	2,6	2,9	11,3	1820	75
315	M3BP 355MLB 6	3GBP353420-••G	992	95,7	96,0	95,5	0,83	570	7,0	3032	2,5	2,7	13,5	2180	75
355	M3BP 355LKA 6	3GBP353810-••G	992	95,7	95,9	95,4	0,81	658	7,6	3417	2,7	2,9	15,5	2500	75
400	M3BP 355LKB 6	3GBP353820-••G	992	96,0	96,0	95,5	0,83	724	7,2	3850	2,6	2,6	16,5	2600	75
400	M3BP 400LA 6	3GBP403510-••G	993	96,2	96,2	95,6	0,82	731	7,1	3846	2,3	2,7	17,0	2900	76
450	M3BP 400LB 6	3GBP403520-••G	994	96,6	96,6	96,1	0,82	819	7,4	4323	2,4	2,8	20,5	3150	76
500	M3BP 400LC 6	3GBP403530-••G	993	96,6	96,5	96,1	0,83	891	7,2	4809	2,5	2,7	22,0	3300	76
560	M3BP 400LD 6	3GBP403540-••G	993	96,9	96,9	96,4	0,85	984	7,4	5386	2,4	2,8	24,0	3400	77
630	M3BP 450LA 6	3GBP453510-••G	994	96,7	96,7	96,3	0,84	1127	6,5	6053	1,1	2,5	31,0	4150	81
710	M3BP 450LB 6	3GBP453520-••G	995	96,9	97,0	96,5	0,85	1244	7,0	6814	1,3	2,5	37,0	4500	81
800 [1]	M3BP 450LC 6	3GBP453530-••G	995	96,9	96,9	96,4	0,84	1415	7,2	7677	1,3	2,7	41,0	4800	81

[1] Temperature rise class F

Technical data
IE2 cast iron motors, 1000 r/min

IP 55 - IC 411 - Insulation class F, temperature rise class B
IE2 efficiency class according to IEC 60034-30-1; 2014

Output kW	Motor type	Product code	Speed r/min	Efficiency IEC 60034-30-1; 2014 Full load 100%	3/4 load 75%	1/2 load 50%	Power factor Cosφ	Current I_N A	I_S/I_N	Torque T_N Nm	T_l/T_N	T_b/T_N	Moment of inertia J = 1/4 GD²kgm²	Weight kg	Sound pressure Level L_{PA} dB
1000 r/min = 6 poles				400 V 50 Hz				High-output design							
15	M3BP 160MLC 6	3GBP163430-••G	971	89,7	91,2	91,2	0,77	31,3	7,3	147	1,8	3,6	0,131	185	59
18.5	M3BP 180MLB 6	3GBP183420-••G	975	90,7	92,0	92,0	0,79	37,2	5,8	181	1,7	2,7	0,198	221	59
30 [1]	M3BP 200MLC 6	3GBP203430-••G	985	92,0	93,1	92,8	0,83	56,7	6,9	290	2,3	2,8	0,531	318	63
37	M3BP 225SMB 6	3GBP223220-••G	985	93,1	94,0	94,0	0,83	69,1	6,6	358	2,3	2,6	0,821	393	63
45 [1]	M3BP 225SMC 6	3GBP223230-••G	984	92,7	93,9	94,0	0,83	84,4	6,4	436	2,3	2,6	0,821	393	63
45	M3BP 250SMB 6	3GBP253220-••G	989	93,4	94,1	93,9	0,83	83,7	7,0	434	2,5	2,7	1,37	441	63
55 [1]	M3BP 250SMC 6	3GBP253230-••G	988	93,2	94,1	94,0	0,84	101	7,1	531	2,6	2,8	1,50	468	63
75	M3BP 280SMC 6	3GBP283230-••G	990	94,2	94,7	94,5	0,84	137	7,3	723	2,8	2,7	2,85	725	66
90	M3BP 280MLA 6	3GBP283410-••G	990	94,1	94,3	93,7	0,81	170	7,1	868	2,4	2,5	3,10	840	70
110	M3BP 280MLB 6	3GBP283420-••G	990	94,5	94,8	94,4	0,82	205	7,5	1061	2,7	2,6	4,10	890	70
160	M3BP 315LKA 6	3GBP313810-••G	992	95,3	95,3	94,7	0,83	291	7,5	1540	2,6	2,8	7,30	1410	74
180	M3BP 315LKB 6	3GBP313820-••G	992	95,3	95,4	94,8	0,83	328	7,4	1732	2,6	2,8	8,30	1520	74
200	M3BP 315LKC 6	3GBP313830-••G	989	95,4	95,6	95,3	0,85	360	6,8	1931	2,5	2,6	9,20	1600	74

[1] Temperature rise class F

Technical data
Cast iron motors, 750 r/min

IP 55 - IC 411 - Insulation class F, temperature rise class B
Efficiency class according to IEC 60034-30-1; 2014

Output kW	Motor type	Product code	Speed r/min	Efficiency IEC 60034-30-1; 2014 Full load 100%	3/4 load 75%	1/2 load 50%	Power factor Cosφ	Current I_N A	I_S/I_N	Torque T_N Nm	T_l/T_N	T_b/T_N	Moment of inertia J = 1/4 GD²kgm²	Weight kg	Sound pressure Level L_{PA} dB
750 r/min = 8 poles				400 V 50 Hz				CENELEC-design							
0.09	M3BP 71MA 8	3GBP074101-••B	660	49,4	46,4	39,7	0,60	0,4	2,7	1,3	2,0	2,5	0,000890	11	40
0.12	M3BP 71MB 8	3GBP074102-••B	670	51,5	47,6	40,0	0,56	0,6	2,7	1,7	2,0	2,5	0,00110	12	43
0.18	M3BP 80MA 8	3GBP084101-••B	700	57,4	53,7	46,1	0,62	0,8	3,2	2,5	2,1	2,8	0,00187	15	45
0.25	M3BP 80MB 8	3GBP084102-••B	680	61,5	61,3	53,5	0,65	0,9	3,1	3,5	1,9	2,6	0,00239	17	50
0.37	M3BP 90SLB 8	3GBP094102-••B	705	66,3	64,0	57,0	0,54	1,4	2,8	5,0	1,9	2,5	0,00444	24	50
0.55	M3BP 90SLC 8	3GBP094103-••B	655	61,8	65,6	65,2	0,67	1,9	2,6	8,0	1,4	1,9	0,00491	25	53
0.75	M3BP 100LA 8	3GBP104101-••B	710	74,0	72,3	67,1	0,61	2,5	3,7	10,1	1,8	2,6	0,00720	30	46
1.1	M3BP 100LB 8	3GBP104102-••B	695	76,0	76,4	74,5	0,66	3,1	3,6	15,1	1,6	2,3	0,00871	30	53
1.5	M3BP 112M 8	3GBP114101-••B	690	74,4	75,9	74,1	0,74	4,1	3,5	20,9	1,9	2,6	0,0106	39	55
2.2	M3BP 132SMA 8	3GBP134101-••B	715	79,7	79,5	77,1	0,66	6,5	4,7	29,2	1,6	2,8	0,0334	70	56
3	M3BP 132SMB 8	3GBP134102-••B	715	79,9	79,7	76,6	0,64	8,5	4,7	39,7	1,7	2,8	0,040	75	58
4	M3BP 160MLA 8	3GBP164410-••G	728	84,0	85,1	83,6	0,67	10,2	5,4	52,4	1,5	2,6	0,068	120	59
5.5	M3BP 160MLB 8	3GBP164420-••G	726	84,6	85,9	84,8	0,67	13,9	5,6	72,3	1,4	2,6	0,085	134	59
7.5	M3BP 160MLC 8	3GBP164430-••G	727	86,0	87,3	86,5	0,65	19,3	4,7	98,5	1,5	2,8	0,132	184	59
11	M3BP 180MLA 8	3GBP184410-••G	731	86,7	88,3	87,8	0,67	27,3	4,4	143	1,8	2,6	0,214	233	59
15 [1]	M3BP 200MLA 8	3GBP204410-••G	737	89,5	90,8	90,3	0,74	32,4	5,3	194	2,0	2,4	0,450	290	60
18.5	M3BP 225SMA 8	3GBP224210-••G	739	90,0	91,1	90,6	0,73	40,1	5,2	239	2,0	2,3	0,669	350	63
22	M3BP 225SMB 8	3GBP224220-••G	738	90,5	91,4	91,0	0,74	46,8	5,5	284	2,0	2,3	0,722	363	63
30	M3BP 250SMA 8	3GBP254210-••G	742	91,2	91,8	91,1	0,71	66,0	5,8	386	2,6	2,4	1,40	440	63
37	M3BP 280SMA 8	3GBP284210-••G	742	92,7	92,9	92,2	0,79	72,6	7,3	476	1,7	3,0	1,85	605	65
45	M3BP 280SMB 8	3GBP284220-••G	741	93,2	93,4	92,8	0,78	89,2	7,6	579	1,8	3,1	2,20	645	65
55	M3BP 315SMA 8	3GBP314210-••G	742	93,4	93,9	93,4	0,79	106	7,1	707	1,6	2,7	3,20	830	62
75	M3BP 315SMB 8	3GBP314220-••G	741	93,7	93,8	93,7	0,82	146	7,1	966	1,7	2,7	4,10	930	62
90	M3BP 315SMC 8	3GBP314230-••G	741	94,0	94,3	94,0	0,82	170	7,4	1159	1,8	2,7	4,90	1000	64
110	M3BP 315MLA 8	3GBP314410-••G	740	94,0	94,2	94,3	0,83	211	7,3	1419	1,8	2,7	5,80	1150	72
132	M3BP 355SMA 8	3GBP354210-••G	744	94,7	94,6	94,2	0,80	256	7,5	1694	1,5	2,6	7,90	1520	69
160	M3BP 355SMB 8	3GBP354220-••G	744	95,2	95,2	94,8	0,77	293	7,6	1926	1,6	2,6	9,70	1680	69
200	M3BP 355SMC 8	3GBP354230-••G	742	95,3	95,7	95,5	0,79	385	7,4	2576	1,6	2,6	11,3	1820	69
250	M3BP 355MLB 8	3GBP354420-••G	743	95,4	95,5	95,0	0,80	472	7,5	3213	1,6	2,7	13,5	2180	72
315	M3BP 400LA 8	3GBP404510-••G	743	96,1	96,0	95,6	0,81	592	7,0	4043	1,2	2,6	17,0	2900	71
315 [1]	M3BP 355LKB 8	3GBP354820-••G	742	95,5	95,7	95,2	0,80	595	7,9	4053	1,7	2,7	16,5	2600	75
355	M3BP 400LB 8	3GBP404520-••G	743	96,2	96,3	96,1	0,83	641	6,8	4562	1,2	2,5	21,0	3200	71
400	M3BP 400LC 8	3GBP404530-••G	744	96,3	96,4	96,1	0,82	735	7,4	5134	1,3	2,7	24,0	3400	71
450	M3BP 450LA 8	3GBP454510-••G	744	96,2	96,5	96,2	0,83	813	6,0	5775	1,0	2,5	26,0	3750	80
500	M3BP 450LB 8	3GBP454520-••G	744	96,3	96,4	96,2	0,83	902	6,4	6417	1,0	2,6	29,0	4000	80
560	M3BP 450LC 8	3GBP454530-••G	744	96,4	96,5	96,1	0,82	1038	7,0	7188	1,2	2,9	35,0	4350	80
630 [1]	M3BP 450LD 8	3GBP454540-••G	745	96,6	96,7	96,2	0,81	1162	7,6	8075	1,3	3,2	41,0	4800	80

[1] Temperature rise class F

Technical data
Cast iron motors, 750 r/min

IP 55 - IC 411 - Insulation class F, temperature rise class B
Efficiency class according to IEC 60034-30-1; 2014

Output kW	Motor type	Product code	Speed r/min	Efficiency IEC 60034-30-1; 2014 Full load 100%	3/4 load 75%	1/2 load 50%	Power factor Cosφ	Current I_N A	I_s/I_N	Torque T_N Nm	T_l/T_N	T_b/T_N	Moment of inertia J = 1/4 GD²kgm²	Weight kg	Sound pressure Level L_{PA} dB
750 r/min = 8 poles				400 V 50 Hz				High-output design							
18.5	M3BP 200MLB 8	3GBP204420-••G	739	90,0	90,8	90,2	0,74	40,0	5,4	239	2,1	2,3	0,530	318	60
30	M3BP 225SMC 8	3GBP224230-••G	737	91,2	92,3	92,1	0,73	64,7	5,6	388	2,3	2,4	0,828	393	63
37	M3BP 250SMB 8	3GBP254220-••G	740	91,7	92,8	92,5	0,73	78,9	5,4	477	2,6	2,3	1,51	468	63
45 [1]	M3BP 250SMC 8	3GBP254230-••G	738	92,1	93,4	93,4	0,74	95,1	5,6	582	2,3	2,4	1,51	468	63
55	M3BP 280SMC 8	3GBP284230-••G	741	93,4	93,7	93,6	0,80	107	7,9	708	1,9	3,1	2,85	725	65
75	M3BP 280MLB 8	3GBP284420-••G	739	93,7	93,9	93,3	0,80	144	6,7	969	1,7	2,6	4,10	890	72
132	M3BP 315LKA 8	3GBP314810-••G	740	94,1	94,4	94,2	0,83	243	7,3	1703	1,8	2,6	7,30	1410	74
150 [1]	M3BP 315LKB 8	3GBP314820-••G	741	94,1	94,7	94,6	0,83	278	7,7	1938	1,9	2,7	8,30	1520	74
160 [1]	M3BP 315LKC 8	3GBP314830-••G	739	94,2	94,7	94,7	0,83	297	7,7	2068	1,9	2,8	9,20	1600	74

[1] Temperature rise class F

Technical data
Cast iron motors, 600 and 500 r/min

IP 55 - IC 411 - Insulation class F, temperature rise class B efficiency class according to IEC 60034-30-1; 2014

Output kW	Motor type	Product code	Speed r/min	Efficiency IEC 60034-30-1; 2014 Full load 100%	3/4 load 75%	1/2 load 50%	Power factor Cosφ	Current I_N A	I_S/I_N	Torque T_N Nm	T_l/T_N	T_b/T_N	Moment of inertia J = 1/4 GD²kgm²	Weight kg	Sound pressure Level L_{PA} dB
600 r/min = 10 poles				400 V 50 Hz				CENELEC-design							
37	M3BP 280SMB 10	3GBP285220-••G	593	92,5	92,3	90,9	0,73	79,0	6,6	595	1,6	3,0	2,20	645	60
45	M3BP 280SMC 10	3GBP285230-••G	592	93,0	92,9	91,7	0,75	93,1	6,7	725	1,6	2,8	2,85	725	60
55	M3BP 315SMB 10	3GBP315220-••G	594	93,8	93,8	92,9	0,78	108	6,7	884	1,6	2,7	4,10	930	70
75	M3BP 315SMC 10	3GBP315230-••G	593	93,6	93,7	92,8	0,78	148	6,6	1207	1,5	2,8	4,90	1000	70
90	M3BP 315MLA 10	3GBP315410-••G	593	93,7	93,8	93,0	0,78	177	6,6	1449	1,7	2,7	5,80	1150	70
110	M3BP 355SMA 10	3GBP355210-••G	595	94,5	94,5	93,6	0,76	221	6,6	1765	1,3	2,5	7,90	1520	73
132	M3BP 355SMB 10	3GBP355220-••G	594	94,8	94,9	94,2	0,79	254	6,6	2122	1,3	2,4	9,70	1680	73
160	M3BP 355SMC 10	3GBP355230-••G	594	94,8	94,9	94,2	0,77	316	6,9	2572	1,4	2,5	11,3	1820	76
200	M3BP 355MLB 10	3GBP355420-••G	594	95,0	95,1	94,5	0,78	389	6,5	3215	1,4	2,4	13,5	2180	77
250 [1]	M3BP 355LKB 10	3GBP355820-••G	593	95,1	95,3	94,8	0,78	486	6,3	4025	1,4	2,3	16,5	2600	79
250	M3BP 400LB 10	3GBP405520-••G	595	95,3	95,3	94,5	0,74	511	6,2	4012	1,3	2,3	20,0	3100	79
315	M3BP 400LC 10	3GBP405530-••G	595	95,4	95,4	94,7	0,74	644	6,2	5055	1,3	2,3	24,0	3400	79
355	M3BP 450LA 10	3GBP455510-••G	596	95,9	95,9	95,2	0,72	742	5,8	5687	1,1	2,2	31,0	4050	82
355	M3BP 450LB 10	3GBP455520-••G	596	95,3	95,2	94,3	0,71	757	6,3	5687	1,1	2,3	34,0	4250	82
400	M3BP 450LB 10	3GBP455520-••G	596	95,9	95,9	95,1	0,72	836	5,7	6408	1,0	2,1	34,0	4250	82
400	M3BP 450LC 10	3GBP455530-••G	596	95,4	95,3	94,5	0,72	840	6,4	6408	1,1	2,4	38,0	4550	82
450	M3BP 450LC 10	3GBP455530-••G	596	96,1	96,1	95,4	0,73	925	5,8	7210	1,0	2,1	38,0	4550	82
450	M3BP 450LD 10	3GBP455540-••G	596	95,4	95,3	94,4	0,70	972	6,4	7210	1,2	2,4	42,0	4800	82
500 [1]	M3BP 450LD 10	3GBP455540-••G	596	96,1	96,1	95,4	0,71	1057	5,9	8011	1,1	2,2	42,0	4800	82

Output kW	Motor type	Product code	Speed r/min	Efficiency IEC 60034-30-1; 2014 Full load 100%	3/4 load 75%	1/2 load 50%	Power factor Cosφ	Current I_N A	I_S/I_N	Torque T_N Nm	T_l/T_N	T_b/T_N	Moment of inertia J = 1/4 GD²kgm²	Weight kg	Sound pressure Level L_{PA} dB
500 r/min = 12 poles				400 V 50 Hz				CENELEC-design							
30	M3BP 280SMB 12	3GBP286220-••G	493	90,2	89,5	86,9	0,59	81,3	5,8	581	1,9	3,0	2,20	645	71
37	M3BP 280SMC 12	3GBP286230-••G	493	90,6	89,8	87,2	0,58	101	6,3	716	2,0	3,2	2,85	725	71
45	M3BP 315SMB 12	3GBP316220-••G	494	92,8	92,9	92,0	0,76	92,0	6,5	869	1,6	2,6	4,10	930	71
55	M3BP 315SMC 12	3GBP316230-••G	493	93,0	93,2	92,4	0,77	110	6,5	1065	1,6	2,6	4,90	1000	71
75	M3BP 315MLA 12	3GBP316410-••G	493	93,2	93,4	92,8	0,76	152	6,3	1452	1,5	2,5	5,80	1150	71
90	M3BP 355SMA 12	3GBP356210-••G	495	93,5	93,5	92,5	0,72	192	5,7	1736	1,3	2,4	7,90	1520	75
110	M3BP 355SMB 12	3GBP356220-••G	495	93,8	93,8	92,7	0,71	238	6,0	2122	1,4	2,5	9,70	1680	75
132	M3BP 355SMC 12	3GBP356230-••G	495	93,9	93,9	92,9	0,71	285	6,0	2546	1,4	2,5	11,3	1820	77
160	M3BP 355MLB 12	3GBP356420-••G	494	93,8	94,0	93,3	0,74	332	5,7	3092	1,3	2,4	13,5	2180	77
200 [1]	M3BP 355LKB 12	3GBP356820-••G	494	93,9	94,1	93,4	0,73	421	5,8	3866	1,4	2,4	16,5	2600	79
200	M3BP 400LB 12	3GBP406520-••G	495	95,0	95,0	94,3	0,79	384	5,4	3858	1,1	2,2	20,0	3100	82
250	M3BP 400LC 12	3GBP406530-••G	495	95,2	95,2	94,5	0,79	479	5,7	4822	1,1	2,2	24,0	3400	82
315	M3BP 450LB 12	3GBP456520-••G	496	95,6	95,6	94,8	0,76	625	5,5	6064	1,0	2,1	34,0	4300	82
355	M3BP 450LC 12	3GBP456530-••G	495	95,6	95,6	95,0	0,76	705	5,3	6848	1,0	2,0	38,0	4550	82
400 [1]	M3BP 450LD 12	3GBP456540-••G	495	95,7	95,8	95,2	0,77	783	5,3	7716	1,0	2,0	42,0	4800	82

[1] Temperature rise class F

Technical data
IE3 cast iron motors, 3000 r/min

IP 55 - IC 411 - Insulation class F, temperature rise class B
IE3 efficiency class according to IEC 60034-30-1; 2014

Output kW	Motor type	Product code	Speed r/min	Efficiency IEC 60034-30-1; 2014 Full load 100%	3/4 load 75%	1/2 load 50%	Power factor Cosφ	Current I_N A	I_S/I_N	Torque T_N Nm	T_l/T_N	T_b/T_N	Moment of inertia J = 1/4 GD²kgm²	Weight kg	Sound pressure Level L_{PA} dB
3000 r/min = 2 poles				400 V 50 Hz				CENELEC-design							
0.37	M3BP 71MC 2	3GBP071330-••L	2743	73,8	74,4	71,7	0,76	0,94	4,9	1,26	2,3	2,8	0,00088	10	58
0.55	M3BP 71ME 2	3GBP071350-••L	2755	77,8	79,3	78,4	0,83	1,25	6,8	1,9	2,8	3,1	0,00045	11	56
0.75	M3BP 80MC 2	3GBP081330-••L	2879	80,7	81,0	78,8	0,82	1,6	7,2	2,5	3,4	4,2	0,0010	17	57
1.1	M3BP 80ME 2	3GBP081350-••L	2865	82,7	83,8	83,1	0,84	2,3	7,2	3,7	3,5	4,1	0,00120	18	60
1.5	M3BP 90SLA 2	3GBP091010-••L	2901	84,2	84,8	83,8	0,89	2,9	7,7	4,9	2,1	3,5	0,00280	27	69
2.2	M3BP 90LA 2	3GBP091510-••L	2904	85,9	86,3	84,8	0,89	4,2	8,8	7,2	3,1	3,8	0,00360	30	64
3	M3BP 100MLA 2	3GBP101410-••L	2895	87,1	87,9	87,3	0,92	5,4	8,2	9,9	3,3	3,9	0,00130	42	68
4	M3BP 112ME 2	3GBP111350-••L	2882	88,1	89,9	90,9	0,93	6,9	8,3	13,0	2,9	3,7	0,0139	56	70
5.5	M3BP 132SMC 2	3GBP131230-••L	2908	89,2	89,5	88,5	0,90	9,8	7,6	18,0	2,3	3,8	0,0182	69	70
7.5	M3BP 132SME 2	3GBP131250-••L	2916	90,1	90,5	90,1	0,90	13,3	8,4	24,6	2,5	4,3	0,0203	75	70
11	M3BP 160MLA 2	3GBP161410-••L	2943	91,2	92,0	91,6	0,91	19,1	7,2	35,6	2,6	3,6	0,0570	144	69
15	M3BP 160MLB 2	3GBP161420-••L	2947	91,9	92,2	91,8	0,88	26,5	8,2	48,5	3,2	4,2	0,0630	152	69
18.5	M3BP 160MLC 2	3GBP161430-••L	2949	92,4	93,0	92,6	0,90	32,0	9,0	59,8	3,3	3,9	0,0760	164	73
22	M3BP 180MLA 2	3GBP181410-••L	2956	92,7	93,1	92,7	0,90	37,7	7,8	71,0	3,4	3,8	0,110	205	73
30	M3BP 200MLA 2	3GBP201410-••L	2957	93,3	93,8	93,6	0,88	52,4	7,5	96,9	2,5	3,1	0,182	263	73
37	M3BP 200MLB 2	3GBP201420-••L	2960	93,7	94,2	94,1	0,89	64,2	8,2	120	3,1	3,4	0,222	289	73
45	M3BP 225SMA 2	3GBP221210-••L	2968	94,0	94,0	93,0	0,87	79,6	7,3	145	3,2	3,1	0,296	335	76
55	M3BP 250SMA 2	3GBP251210-••L	2968	94,3	93,7	93,6	0,89	94,8	6,8	177	2,4	3,0	0,426	400	76
75	M3BP 280SMB 2	3GBP281220-••L	2978	94,7	94,4	93,5	0,88	130	7,0	240	2,3	3,0	0,90	665	74
90	M3BP 280SMC 2	3GBP281230-••L	2975	95,0	95,0	94,2	0,88	158	6,4	289	2,1	2,8	0,990	690	74
110	M3BP 315SMB 2	3GBP311220-••L	2982	95,2	94,9	93,9	0,87	192	7,0	352	1,8	2,7	1,30	910	78
132	M3BP 315SMC 2	3GBP311230-••L	2982	95,4	95,4	94,6	0,87	229	6,8	422	2,0	2,8	1,50	965	78
160	M3BP 315SMD 2	3GBP311240-••L	2983	95,6	95,6	94,9	0,87	275	7,4	512	2,2	2,8	1,70	1025	78
200	M3BP 315MLA 2	3GBP311410-••L	2983	95,8	95,8	95,3	0,88	342	7,7	640	2,5	3,1	2,10	1190	81
250 [2]	M3BP 355SMA 2	3GBP351210-••L	2985	95,8	95,6	94,6	0,89	423	7,7	800	2,1	3,3	3,00	1600	83
315 [2]	M3BP 355SMB 2	3GBP351220-••L	2980	95,8	95,7	95,0	0,89	529	7,0	1009	2,1	3,0	3,40	1680	83
355 [2]	M3BP 355SMC 2	3GBP351230-••L	2984	95,8	95,8	95,0	0,88	605	7,2	1136	2,2	3,0	3,60	1750	83

Output kW	Motor type	Product code	Speed r/min	Efficiency IEC 60034-30-1; 2014 Full load 100%	3/4 load 75%	1/2 load 50%	Power factor Cosφ	Current I_N A	I_S/I_N	Torque T_N Nm	T_l/T_N	T_b/T_N	Moment of inertia J = 1/4 GD²kgm²	Weight kg	Sound pressure Level L_{PA} dB
3000 r/min = 2 poles				400 V 50 Hz				High-output design							
22	M3BP 160MLD 2	3GBP161440-••L	2944	92,7	93,5	93,5	0,90	38,0	8,4	71,4	3,2	3,7	0,0710	174	74
30	M3BP 180MLB 2	3GBP181420-••L	2957	93,3	94,0	93,9	0,88	52,7	8,7	96,9	3,0	3,8	0,104	215	74
37	M3BP 180MLC 2	3GBP181430-••L	2952	93,7	94,5	94,5	0,88	64,7	8,7	120	3,1	3,7	0,115	229	74
45	M3BP 200MLC 2	3GBP201430-••L	2955	94,0	94,5	94,4	0,89	77,6	8,0	145	2,9	3,3	0,214	305	77
55	M3BP 225SMB 2	3GBP221220-••L	2966	94,3	94,6	94,1	0,88	95,6	7,4	177	2,9	2,9	0,274	355	79
75	M3BP 225SMC 2	3GBP221230-••L	2966	94,7	94,8	94,1	0,88	129	8,1	241	3,3	3,0	0,329	408	79
75	M3BP 250SMB 2	3GBP251220-••L	2971	94,7	95,1	94,8	0,90	127	7,9	241	2,8	3,3	0,644	479	81
90 [1]	M3BP 250SMC 2	3GBP251230-••L	2968	95,0	95,4	95,0	0,90	151	8,4	290	2,7	3,4	0,644	495	81
110	M3BP 280SMD 2	3GBP281240-••L	2977	95,2	95,2	94,4	0,88	190	7,5	353	2,4	3,1	1,150	725	75
250	M3BP 315LKB 2	3GBP311820-••L	2983	95,8	96,0	95,5	0,90	419	7,7	800	2,5	3,3	2,90	1540	81

[1] Temperature rise class F
[2] 3dB(A) sound pressure level reduction with unidirectional fan construction. Direction of rotation must be stated when ordering, see variant codes 044 and 045

Technical data
IE3 Cast iron motors, 3000 r/min

IP 55 - IC 411 - Insulation class F, temperature rise class B
IE3 efficiency class according to IEC 60034-30-1; 2014

Output kW	Motor type	Product code	Speed r/min	Efficiency IEC 60034-30-1; 2014 Full load 100%	3/4 load 75%	1/2 load 50%	Power factor Cosφ	Current I_N A	I_S/I_N	Torque T_N Nm	T_l/T_N	T_b/T_N	Moment of inertia J = 1/4 GD²kgm²	Weight kg	Sound pressure Level L_{PA} dB
3000 r/min = 2 poles				400 V 50 Hz				CENELEC-design							
0.75	M3BP 80MD 2	3GBP081340-••K	2872	82,1	82,5	80,9	0,87	1,51	6,2	2,43	2,9	3,4	0,0012	18	57
1.1	M3BP 80MG 2	3GBP081370-••K	2862	84,2	85,1	84,3	0,87	2,1	6,3	3,65	3	3,5	0,0014	19	60
1.5	M3BP 90LB 2	3GBP091520-••K	2892	86,4	87,4	86,7	0,89	2,7	7,3	4,8	2,0	3,2	0,00310	31	69
2.2	M3BP 90LC 2	3GBP091530-••K	2900	87,6	88,3	87,4	0,89	4,0	9,1	7,3	3,4	4,1	0,00440	35	64
3	M3BP 100LKA 2	3GBP101810-••K	2907	89,0	89,4	88,5	0,89	5,4	8,8	9,9	3,3	4,3	0,00860	50	68
4	M3BP 112MG 2	3GBP111370-••K	2882	88,4	89,9	90,5	0,93	7,0	8,1	13,3	2,8	4,1	0,0132	56	70
5.5	M3BP 132SMF 2	3GBP131260-••K	2902	90,7	91,3	91,0	0,90	9,7	7,3	18,2	2,7	4,2	0,0218	77	67
7.5	M3BP 132SMG 2	3GBP131270-••K	2907	91,3	92,1	92,1	0,90	13,2	8,1	24,7	3,2	4,7	0,0218	77	70
11	M3BP 160MLA 2	3GBP161410-••K	2943	92,1	92,7	92,4	0,92	18,7	8,1	35,6	2,7	3,4	0,0520	151	69
15	M3BP 160MLB 2	3GBP161420-••K	2943	92,5	93,4	93,2	0,92	25,4	8,4	48,6	3,1	3,4	0,0620	163	69
18.5	M3BP 160MLC 2	3GBP161430-••K	2942	93,1	93,9	93,9	0,93	30,8	8,3	60,0	3,1	3,6	0,0720	176	69
22	M3BP 180MLA 2	3GBP181410-••K	2957	93,2	93,9	93,8	0,91	37,4	8,1	71,0	2,6	3,2	0,116	230	69
30	M3BP 200MLA 2	3GBP201410-••K	2958	94,2	94,9	94,7	0,90	51,0	7,8	96,8	2,8	3,1	0,196	289	72
37	M3BP 200MLB 2	3GBP201420-••K	2960	94,7	95,2	95,0	0,91	61,9	8,8	119	3,1	3,4	0,217	301	72
45	M3BP 225SMA 2	3GBP221210-••K	2972	94,9	95,1	94,7	0,89	76,8	7,8	144	3,1	3,0	0,323	387	74
55	M3BP 250SMA 2	3GBP251210-••K	2975	95,2	95,4	95,0	0,89	93,6	8,0	176	2,8	3,3	0,579	439	75
75	M3BP 280SMB 2	3GBP281220-••K	2980	95,5	95,5	94,9	0,87	129	7,3	240	2,1	2,9	0,90	665	77
90	M3BP 280SMC 2	3GBP281230-••K	2981	95,7	95,6	95,0	0,88	153	8,0	288	2,5	3,1	1,150	725	77
110	M3BP 315SMB 2	3GBP311220-••K	2982	95,9	95,9	95,2	0,88	189	6,7	352	1,9	2,6	1,40	940	77
132	M3BP 315SMC 2	3GBP311230-••K	2986	96,1	96,2	95,9	0,88	226	7,9	422	2,4	3,0	1,70	1025	77
160	M3BP 315MLA 2	3GBP311410-••K	2983	96,2	96,5	96,2	0,90	268	7,3	512	2,2	2,7	2,10	1190	77
200 [1]	M3BP 355SMA 2	3GBP351210-••K	2985	96,4	96,1	95,3	0,89	336	7,6	640	2,0	3,1	3,00	1600	83
250 [1]	M3BP 355SMB 2	3GBP351220-••K	2983	96,4	96,5	96,1	0,90	415	7,6	800	2,2	3,0	3,40	1680	83
315 [1]	M3BP 355SMC 2	3GBP351230-••K	2984	96,4	96,4	95,9	0,89	533	7,8	1008	2,3	2,8	3,60	1750	83
355	M3BP 355MLA 2	3GBP351410-••K	2981	96,4	96,7	96,3	0,90	595	7,5	1137	2,3	2,6	4,10	2000	83

Output kW	Motor type	Product code	Speed r/min	Efficiency IEC 60034-30-1; 2014 Full load 100%	3/4 load 75%	1/2 load 50%	Power factor Cosφ	Current I_N A	I_S/I_N	Torque T_N Nm	T_l/T_N	T_b/T_N	Moment of inertia J = 1/4 GD²kgm²	Weight kg	Sound pressure Level L_{PA} dB
3000 r/min = 2 poles				400 V 50 Hz				High-output design							
200	M3BP 315MLB 2	3GBP311420-••K	2983	96,4	96,7	96,6	0,90	333	6,8	640	1,9	2,6	2,20	1220	77
250	M3BP 315LKB 2	3GBP311820-••K	2982	96,4	96,7	96,7	0,91	413	7,9	800	2,5	2,7	2,90	1540	77

[1] 3dB(A) sound pressure level reduction with unidirectional fan construction. Direction of rotation must be stated when ordering, see variant codes 044 and 045

Technical data
IE3 cast iron motors, 1500 r/min

IP 55 - IC 411 - Insulation class F, temperature rise class B
IE3 efficiency class according to IEC 60034-30-1; 2014

Output kW	Motor type	Product code	Speed r/min	Efficiency IEC 60034-30-1; 2014 Full load 100%	3/4 load 75%	1/2 load 50%	Power factor Cosφ	Current I_N A	I_s/I_N	Torque T_N Nm	T_l/T_N	T_b/T_N	Moment of inertia J = 1/4 GD²kgm²	Weight kg	Sound pressure Level L_{PA} dB
1500 r/min = 4 poles				400 V 50 Hz				CENELEC-design							
0.25	M3BP 71MD 4	3GBP072340-••L	1416	73,5	75,1	73,8	0,8	0,6	4,8	1,68	2	2,6	0,0009	11	45
0.37	M3BP 71MLE 4	3GBP072450-••L	1432	77,3	77,4	74,5	0,76	0,9	5,8	2,46	2,7	3,3	0,00122	15	45
0.55	M3BP 80MLC 4	3GBP082430-••L	1444	80,8	81,6	80,1	0,8	1,2	6,7	4	3	3,5	0,0028	20	45
0.75	M3BP 80MLE 4	3GBP082450-••L	1448	82,5	82,5	80,1	0,78	1,7	7,4	4,9	3,5	4,0	0,00330	22	50
1.1	M3BP 90LA 4	3GBP092510-••L	1443	84,1	84,6	83,5	0,76	2,4	5,2	7,3	3,4	4,2	0,00490	28	56
1.5	M3BP 90LB 4	3GBP092520-••L	1445	85,3	85,0	82,6	0,77	3,3	5,7	9,9	3,8	4,6	0,00670	32	56
2.2	M3BP 100LA 4	3GBP102510-••L	1448	86,7	89,0	86,1	0,81	4,5	7,5	14,0	2,3	3,6	0,0109	38	56
3	M3BP 100MLB 4	3GBP102420-••L	1444	87,7	88,4	87,6	0,81	6,1	7,0	19,8	3,3	4,1	0,0121	42	58
4	M3BP 112ME 4	3GBP112350-••L	1453	88,6	88,9	88,0	0,74	8,9	7,8	26,0	3,5	4,3	0,0188	52	59
5.5	M3BP 132SMB 4	3GBP132220-••L	1463	89,6	89,8	88,7	0,74	11,9	7,6	36,0	2,8	3,9	0,0295	68	70
7.5	M3BP 132SME 4	3GBP132250-••L	1462	90,4	90,8	90,2	0,76	15,7	7,9	49,0	3,0	4,0	0,0376	78	64
11	M3BP 160MLA 4	3GBP162410-••L	1477	91,4	91,8	91,1	0,82	21,1	7,6	71,3	2,6	3,3	0,110	160	61
15	M3BP 160MLB 4	3GBP162420-••L	1477	92,1	92,4	91,6	0,82	28,5	8,2	97,0	3,0	3,7	0,135	179	61
18.5	M3BP 180MLA 4	3GBP182410-••L	1481	92,6	93,2	92,9	0,83	34,9	7,2	119	2,8	3,0	0,219	215	60
22	M3BP 180MLB 4	3GBP182420-••L	1481	93,0	93,5	93,3	0,82	41,4	6,5	142	3,0	3,2	0,243	229	60
30	M3BP 200MLA 4	3GBP202410-••L	1483	93,6	93,8	93,4	0,84	54,8	7,5	193	2,7	3,2	0,385	292	63
37	M3BP 225SMA 4	3GBP222210-••L	1482	93,9	94,1	93,8	0,83	68,9	7,2	239	3,1	3,1	0,427	322	67
45	M3BP 225SMB 4	3GBP222220-••L	1482	94,2	94,4	94,0	0,84	82,3	8,0	290	3,2	3,5	0,525	357	66
55	M3BP 250SMA 4	3GBP252210-••L	1482	94,6	94,7	94,0	0,84	100	7,1	354	2,9	3,4	0,694	406	68
75	M3BP 280SMB 4	3GBP282220-••L	1485	95,0	95,2	94,8	0,86	133	6,4	483	2,3	2,8	1,380	645	75
90	M3BP 280SMC 4	3GBP282230-••L	1485	95,2	95,5	95,2	0,86	158	7,1	578	2,5	2,9	1,730	700	75
110	M3BP 315SMB 4	3GBP312220-••L	1489	95,4	95,5	94,9	0,84	195	7,0	705	2,1	3,0	2,430	930	71
132	M3BP 315SMC 4	3GBP312230-••L	1488	95,6	95,9	95,5	0,86	231	6,7	847	2,2	2,9	2,90	1000	71
160	M3BP 315SMD 4	3GBP312240-••L	1488	95,8	96,0	95,8	0,85	282	6,9	1026	2,2	3,0	3,20	1065	71
200	M3BP 315MLB 4	3GBP312420-••L	1487	96,0	96,4	96,4	0,86	351	6,8	1284	2,4	3,0	3,90	1220	74
250	M3BP 355SMA 4	3GBP352210-••L	1491	96,0	96,0	95,6	0,86	435	6,4	1601	2,1	2,9	5,90	1610	78
315	M3BP 355SMB 4	3GBP352220-••L	1491	96,0	96,1	95,7	0,85	550	7,3	2018	2,4	3,3	6,90	1780	78
355	M3BP 355SMC 4	3GBP352230-••L	1490	96,0	96,2	95,8	0,86	616	6,3	2273	2,3	2,8	7,20	1820	78

Output kW	Motor type	Product code	Speed r/min	Efficiency IEC 60034-30-1; 2014 Full load 100%	3/4 load 75%	1/2 load 50%	Power factor Cosφ	Current I_N A	I_s/I_N	Torque T_N Nm	T_l/T_N	T_b/T_N	Moment of inertia J = 1/4 GD²kgm²	Weight kg	Sound pressure Level L_{PA} dB
1500 r/min = 4 poles				400 V 50 Hz				High-output design							
18.5	M3BP 160MLC 4	3GBP162430-••L	1473	92,6	93,3	93,1	0,82	35,1	8,3	120	3,1	3,5	0,124	180	67
37	M3BP 200MLB 4	3GBP202420-••L	1480	93,9	94,8	94,8	0,82	69,3	7,5	239	2,8	2,9	0,362	305	68
55	M3BP 225SMC 4	3GBP222230-••L	1478	94,6	94,9	94,8	0,84	99,9	7,7	355	3,3	3,3	0,536	391	71
75	M3BP 250SMB 4	3GBP252220-••L	1482	95,0	95,4	95,0	0,84	135	7,9	483	3,3	3,5	0,941	464	73
110	M3BP 280SMD 4	3GBP282240-••L	1486	95,4	95,7	95,3	0,85	196	7,3	707	2,7	3,0	1,950	750	76
132	M3BP 280MLA 4	3GBP282410-••L	1483	95,6	95,9	95,7	0,86	232	7,0	849	2,7	2,8	2,30	840	75
160	M3BP 280MLB 4	3GBP282420-••L	1484	95,8	96,0	95,8	0,86	280	7,4	1029	2,9	2,9	2,50	890	75
250	M3BP 315LKA 4	3GBP312810-••L	1488	96,0	96,3	96,1	0,85	442	6,9	1604	2,5	3,2	4,40	1410	78
280	M3BP 315LKB 4	3GBP312820-••L	1488	96,0	96,2	96,0	0,86	490	7,8	1797	2,7	3,1	5,00	1520	78
315	M3BP 315LKC 4	3GBP312830-••L	1489	96,0	96,1	95,8	0,85	557	8,3	2020	3,0	3,3	5,50	1600	78

Technical data
IE3 Cast iron motors, 1500 r/min

IP 55 - IC 411 - Insulation class F, temperature rise class B
IE3 efficiency class according to IEC 60034-30-1; 2014

Output kW	Motor type	Product code	Speed r/min	Efficiency IEC 60034-30-1; 2014 Full load 100%	3/4 load 75%	1/2 load 50%	Power factor Cosφ	Current I_N A	I_S/I_N	Torque T_N Nm	T_l/T_N	T_b/T_N	Moment of inertia J = 1/4 GD²kgm²	Weight kg	Sound pressure Level L_{PA} dB
1500 r/min = 4 poles				400 V 50 Hz				CENELEC-design							
0.55	M3BP 80MLD 4	3GBP082440-••K	1439	82,9	84,2	83,5	0,81	1,18	6,3	3,6	2,7	3,3	0,0028	20	45
0.75	M3BP 80MLG 4	3GBP082470-••K	1445	84,1	85	83,8	0,79	1,62	7	4,97	3,1	3,8	0,0033	22	57
1.1	M3BP 90LC 4	3GBP092530-••K	1444	87,1	87,5	86,4	0,79	2,3	7,2	7,3	2,7	3,7	0,00670	33	56
1.5	M3BP 90LD 4	3GBP092540-••K	1442	87,1	88,1	87,6	0,78	3,1	7,8	10,0	3,4	4,5	0,00720	34	56
2.2	M3BP 100LKA 4	3GBP102810-••K	1452	89,4	90,3	90,2	0,83	4,2	7,4	14,5	2,2	3,9	0,0146	49	56
3	M3BP 100LKB 4	3GBP102820-••K	1452	89,4	90,5	90,5	0,83	5,8	7,5	19,7	2,3	4,0	0,0146	49	58
4	M3BP 112MG 4	3GBP112370-••K	1454	88,6	89,1	88,6	0,75	8,7	7,5	26,3	3,5	3,7	0,0176	52	1978
5.5	M3BP 132SMF 4	3GBP132260-••K	1462	90,7	91,6	91,6	0,81	10,8	7,3	35,9	2,4	3,4	0,0401	81	67
7.5	M3BP 132SMG 4	3GBP132270-••K	1457	90,4	91,5	91,7	0,81	14,8	7,3	49,1	2,4	3,4	0,0401	81	64
11	M3BP 160MLA 4	3GBP162410-••K	1473	92,2	93,0	92,7	0,84	20,4	7,7	71,3	2,6	2,9	0,108	165	62
15	M3BP 160MLB 4	3GBP162420-••K	1474	92,6	93,4	93,2	0,84	27,8	7,9	97,1	2,8	3,3	0,125	181	62
18.5	M3BP 180MLA 4	3GBP182410-••K	1481	93,3	94,0	93,8	0,82	34,9	7,6	119	3,0	3,1	0,217	224	62
22	M3BP 180MLB 4	3GBP182420-••K	1480	93,3	94,1	94,1	0,82	41,5	8,2	141	2,8	3,1	0,217	229	62
30	M3BP 200MLA 4	3GBP202410-••K	1484	94,4	94,8	94,6	0,84	54,6	8,3	193	3,0	3,3	0,366	299	63
37	M3BP 225SMA 4	3GBP222210-••K	1482	94,9	95,5	95,4	0,86	65,4	7,7	238	2,8	3,1	0,536	376	66
45	M3BP 225SMB 4	3GBP222220-••K	1482	95,2	95,6	95,5	0,85	80,2	7,9	289	2,8	3,2	0,536	377	66
55	M3BP 250SMA 4	3GBP252210-••K	1485	95,4	95,9	95,7	0,85	97,8	7,9	353	3,0	3,3	0,933	458	67
75	M3BP 280SMB 4	3GBP282220-••K	1486	95,9	96,2	96,1	0,85	134	7,4	482	2,5	2,8	1,50	665	72
90	M3BP 280SMC 4	3GBP282230-••K	1487	96,0	96,2	95,9	0,85	161	7,9	578	2,9	3,0	1,850	725	72
110	M3BP 315SMC 4	3GBP312230-••K	1491	96,2	96,5	96,1	0,85	194	7,8	704	2,4	3,1	2,90	1000	68
132	M3BP 315SMD 4	3GBP312240-••K	1490	96,3	96,6	96,2	0,85	234	7,9	846	2,6	3,2	3,20	1065	68
160	M3BP 315MLB 4	3GBP312420-••K	1490	96,5	96,7	96,4	0,87	278	7,9	1026	2,7	3,0	3,90	1220	68
200	M3BP 355SMA 4	3GBP352210-••K	1491	96,6	96,7	96,4	0,87	345	7,3	1282	2,1	2,7	5,90	1610	74
250	M3BP 355SMB 4	3GBP352220-••K	1491	96,6	96,8	96,5	0,87	433	7,8	1601	2,5	2,9	6,90	1780	74
315	M3BP 355SMC 4	3GBP352230-••K	1490	96,6	96,8	96,5	0,85	554	7,4	2017	2,8	2,9	7,20	1820	74
355	M3BP 355MLA 4	3GBP352410-••K	1491	96,6	96,9	96,5	0,87	616	7,9	2274	2,7	2,9	8,40	2140	78

Output kW	Motor type	Product code	Speed r/min	Efficiency IEC 60034-30-1; 2014 Full load 100%	3/4 load 75%	1/2 load 50%	Power factor Cosφ	Current I_N A	I_S/I_N	Torque T_N Nm	T_l/T_N	T_b/T_N	Moment of inertia J = 1/4 GD²kgm²	Weight kg	Sound pressure Level L_{PA} dB
1500 r/min = 4 poles				400 V 50 Hz				High-output design							
200	M3BP 315LKB 4	3GBP312820-••K	1490	96,6	96,8	96,7	0,87	346	7,6	1282	2,5	2,9	5,00	1520	74
250	M3BP 315LKC 4	3GBP312830-••K	1490	96,6	96,9	96,8	0,87	432	7,8	1601	2,3	3,0	5,50	1600	74

Technical data
IE3 cast iron motors, 1000 r/min

IP 55 - IC 411 - Insulation class F, temperature rise class B
IE3 efficiency class according to IEC 60034-30-1; 2014

Output kW	Motor type	Product code	Speed r/min	Efficiency IEC 60034-30-1; 2014 Full load 100%	3/4 load 75%	1/2 load 50%	Power factor Cosφ	Current I_N A	I_s/I_N	Torque T_N Nm	T_l/T_N	T_b/T_N	Moment of inertia J = 1/4 GD²kgm²	Weight kg	Sound pressure Level L_{PA} dB
1000 r/min = 6 poles				400 V 50 Hz				CENELEC-design							
0.18	M3BP 71ME 6	3GBP073350-••L	887	63,9	64,2	59,7	0,74	0,57	3,2	1,9	1,9	2,2	0,00091	10	45
0.25	M3BP 80MB 6	3GBP083320-••L	942	68,6	67	61,7	0,61	0,82	4,8	2,5	2,7	2,9	0,0019	14	47
0.37	M3BP 80MC 6	3GBP083330-••L	936	73,5	73,9	71,1	0,67	1,06	5,1	3,8	2,6	2,9	0,0028	16	50
0.55	M3BP 80ME 6	3GBP083350-••L	933	77,2	77,9	75,9	0,68	1,52	5	5,6	2,7	2,9	0,0035	18	47
0.75	M3BP 90SLD 6	3GBP093040-••L	940	78,9	80,3	79,2	0,75	1,8	4,4	7,6	2,1	2,8	0,00560	29	44
1.1	M3BP 90LF 6	3GBP093560-••L	944	81,0	81,7	80,1	0,75	2,6	4,7	11,1	2,1	2,8	0,00680	33	44
1.5	M3BP 100MLB 6	3GBP103420-••L	960	82,5	82,5	80,1	0,68	3,8	5,4	14,9	2,7	3,4	0,0120	41	49
2.2	M3BP 112MJ 6	3GBP113390-••L	962	84,3	85,5	84,7	0,68	5,3	4,2	21,8	1,4	2,3	0,0196	53	66
3	M3BP 132SMB 6	3GBP133220-••L	973	85,6	85,1	82,9	0,62	8,0	6,6	29,2	2,7	3,8	0,0355	75	57
4	M3BP 132SMF 6	3GBP133260-••L	971	86,8	86,5	84,7	0,62	10,7	6,6	39,0	2,7	3,8	0,0416	82	57
5.5	M3BP 132SMJ 6	3GBP133290-••L	966	88,0	89,1	88,9	0,73	12,3	4,2	54,0	1,7	2,7	0,0408	81	57
7.5	M3BP 160MLA 6	3GBP163410-••L	975	89,1	90,0	90,0	0,77	15,7	5,7	73,2	1,4	3,0	0,0890	146	59
11	M3BP 160MLB 6	3GBP163420-••L	975	90,3	91,1	91,1	0,78	22,5	6,4	108	1,6	3,1	0,138	180	64
15	M3BP 180MLA 6	3GBP183410-••L	979	91,2	91,9	91,6	0,79	30,1	5,2	147	1,5	2,7	0,212	212	63
18.5	M3BP 200MLA 6	3GBP203410-••L	989	91,7	91,9	91,2	0,82	35,2	6,5	179	2,2	3,2	0,496	272	59
22	M3BP 200MLB 6	3GBP203420-••L	989	92,2	92,4	91,4	0,81	42,4	7,3	212	2,6	3,5	0,585	297	59
30	M3BP 225SMA 6	3GBP223210-••L	988	92,9	93,0	92,2	0,77	60,4	7,7	291	2,9	3,6	0,724	349	63
37	M3BP 250SMA 6	3GBP253210-••L	990	93,3	93,7	93,5	0,80	71,1	6,5	357	2,4	3,1	1,30	431	58
45	M3BP 280SMB 6	3GBP283220-••L	991	93,7	94,0	93,5	0,84	82,0	7,4	433	2,7	3,0	1,870	645	72
55	M3BP 280SMC 6	3GBP283230-••L	992	94,1	94,3	93,8	0,86	99,0	7,5	528	2,8	3,0	2,570	725	71
75	M3BP 315SMB 6	3GBP313220-••L	994	94,6	94,9	94,6	0,84	136	6,8	720	1,8	2,6	4,10	930	75
90	M3BP 315SMC 6	3GBP313230-••L	994	94,9	95,1	94,7	0,84	164	7,2	864	2,0	3,0	4,60	1000	76
110	M3BP 315SMD 6	3GBP313240-••L	994	95,1	95,3	95,0	0,83	200	7,3	1056	2,2	3,1	4,90	1040	75
132	M3BP 315MLB 6	3GBP313420-••L	995	95,4	95,5	95,1	0,82	242	7,3	1266	2,3	3,2	6,30	1200	72
160	M3BP 355SMA 6	3GBP353210-••L	993	95,6	95,8	95,6	0,82	292	6,7	1538	2,5	2,6	7,90	1520	75
200	M3BP 355SMB 6	3GBP353220-••L	993	95,8	96,2	96,1	0,82	365	6,7	1923	2,6	2,5	9,70	1680	75
250	M3BP 355SMC 6	3GBP353230-••L	993	95,8	96,1	95,8	0,81	465	7,7	2404	3,0	3,1	11,30	1820	75
315	M3BP 355MLB 6	3GBP353420-••L	993	95,8	96,1	96,0	0,83	571	6,8	3029	2,6	3,2	13,50	2180	76
355	M3BP 355LKA 6	3GBP353810-••L	993	95,8	96,0	95,9	0,81	653	7,5	3413	2,9	3,2	15,50	2500	76

Output kW	Motor type	Product code	Speed r/min	Efficiency IEC 60034-30-1; 2014 Full load 100%	3/4 load 75%	1/2 load 50%	Power factor Cosφ	Current I_N A	I_s/I_N	Torque T_N Nm	T_l/T_N	T_b/T_N	Moment of inertia J = 1/4 GD²kgm²	Weight kg	Sound pressure Level L_{PA} dB
1000 r/min = 6 poles				400 V 50 Hz				High-output design							
18.5	M3BP 180MLB 6	3GBP183420-••L	980	91,7	92,5	92,0	0,75	38,8	6,4	180	2,1	3,1	0,220	219	65
37	M3BP 225SMB 6	3GBP223220-••L	985	93,3	93,7	93,4	0,80	71,5	7,0	359	2,7	3,0	0,813	382	68
45	M3BP 250SMB 6	3GBP253220-••L	991	93,7	94,1	93,6	0,81	85,5	7,6	434	2,9	3,3	1,50	465	68
55	M3BP 250SMC 6	3GBP253230-••L	989	94,1	94,7	94,5	0,80	105	7,1	531	3,0	3,1	1,490	466	68
75	M3BP 280SMD 6	3GBP283240-••L	991	94,6	94,9	94,5	0,85	135	7,6	723	2,8	3,0	3,00	740	73
160	M3BP 315LKA 6	3GBP313810-••L	994	95,6	95,8	95,4	0,81	298	7,5	1535	2,2	3,1	7,30	1410	76
180	M3BP 315LKB 6	3GBP313820-••L	994	95,8	95,9	95,4	0,82	331	7,6	1729	2,3	3,1	8,30	1520	76
200	M3BP 315LKC 6	3GBP313830-••L	993	95,8	96,1	95,8	0,82	367	7,0	1923	2,2	2,8	9,20	1600	76

Technical data
IE3 Cast iron motors, 1000 r/min

IP 55 - IC 411 - Insulation class F, temperature rise class B
IE3 efficiency class according to IEC 60034-30-1; 2014

Output kW	Motor type	Product code	Speed r/min	Efficiency IEC 60034-30-1; 2014 Full load 100%	3/4 load 75%	1/2 load 50%	Power factor Cosφ	Current I_N A	I_S/I_N	Torque T_N Nm	T_l/T_N	T_b/T_N	Moment of inertia J = 1/4 GD²kgm²	Weight kg	Sound pressure Level L_{PA} dB
1000 r/min = 6 poles				400 V 50 Hz				CENELEC-design							
0.25	M3BP 80MA 6	3GBP083310-••K	937	73,3	72,2	67,6	0,64	0,76	2,6	2,52	1,4	2	0,0019	14	47
0.37	M3BP 80MD 6	3GBP083340-••K	930	77,9	78,6	76,7	0,72	0,95	3,3	3,75	1,5	2	0,0028	16	47
0.55	M3BP 80MLG 6	3GBP083470-••K	937	80,4	81	79,5	0,63	1,56	4,4	5,6	1,9	2,2	0,0044	21	47
0.75	M3BP 90LG 6	3GBP093570-••K	938	81,5	82,8	82,2	0,74	1,8	4,8	7,7	2,4	2,7	0,00720	34	44
1.1	M3BP 100LKG 6	3GBP103870-••K	969	84,4	84,5	82,8	0,68	2,6	4,1	10,9	1,6	2,2	0,00250	47	49
1.5	M3BP 112MH 6	3GBP113380-••K	972	85,8	85,6	83,6	0,64	3,8	4,5	14,7	1,3	2,5	0,0196	53	66
2.2	M3BP 132SMC 6	3GBP133230-••K	978	87,3	87,5	86,1	0,69	5,1	5,4	21,5	2,0	2,6	0,0416	81	57
3	M3BP 132SMD 6	3GBP133240-••K	977	88,5	88,8	87,5	0,69	6,9	5,9	29,0	1,4	2,8	0,0416	82	57
4	M3BP 132SMG 6	3GBP133270-••K	974	89,4	89,9	89,3	0,69	9,3	5,6	38,7	2,2	2,8	0,0416	82	57
5.5	M3BP 132SMH 6	3GBP133280-••K	966	89,6	90,4	90,2	0,73	12,1	5,0	54,1	1,8	2,7	0,0654	79	57
7.5	M3BP 160MLA 6	3GBP163410-••K	980	90,8	91,5	91,0	0,78	15,2	7,9	73,0	1,7	3,3	0,114	164	59
11	M3BP 160MLB 6	3GBP163420-••K	979	91,2	91,8	91,1	0,74	23,5	8,5	107,0	2,2	3,9	0,131	177	59
15	M3BP 180MLA 6	3GBP183410-••K	981	92,2	92,4	91,5	0,77	30,4	7,7	146,0	2,2	3,5	0,225	220	59
18.5	M3BP 200MLA 6	3GBP203410-••K	990	92,8	93,2	92,6	0,77	37,3	7,5	178,0	2,6	3,2	0,448	272	63
22	M3BP 200MLB 6	3GBP203420-••K	990	93,3	93,7	93,1	0,79	43,0	7,8	212,0	2,6	3,2	0,531	293	63
30	M3BP 225SMA 6	3GBP223210-••K	989	94,1	94,6	94,4	0,81	56,8	7,9	289,0	2,8	3,1	0,813	370	63
37	M3BP 250SMA 6	3GBP253210-••K	991	94,4	94,9	94,7	0,83	68,0	7,7	356,0	2,7	2,9	1,490	457	63
45	M3BP 280SMB 6	3GBP283220-••K	992	94,7	95,1	94,6	0,85	80,9	6,9	434,0	2,4	2,6	2,20	680	65
55	M3BP 280SMC 6	3GBP283230-••K	990	95,0	95,4	95,0	0,85	99,4	6,8	506,0	2,4	2,6	2,850	725	65
75	M3BP 315SMC 6	3GBP313230-••K	994	95,3	95,6	95,2	0,83	138	7,0	721,0	2,2	2,8	4,90	1000	67
90	M3BP 315SMD 6	3GBP313240-••K	994	95,5	95,8	95,4	0,81	170	7,2	864	2,4	2,9	4,90	1040	67
110	M3BP 315MLB 6	3GBP313420-••K	994	95,7	95,9	95,7	0,83	202	6,9	1058	2,3	2,7	6,30	1200	68
132	M3BP 315LKA 6	3GBP313810-••K	993	95,9	96,1	95,9	0,82	243	6,9	1269	2,4	2,7	7,30	1410	68
160	M3BP 355SMB 6	3GBP353220-••K	995	96,1	96,1	95,6	0,82	294	7,0	1536	2,1	2,7	9,70	1680	73
200	M3BP 355SMC 6	3GBP353230-••K	995	96,2	96,4	96,1	0,82	367	7,3	1920	2,3	2,8	11,30	1820	73
250	M3BP 355MLB 6	3GBP353420-••K	995	96,4	96,6	96,5	0,83	456	7,1	2399	2,3	2,7	13,50	2180	73
315	M3BP 355LKA 6	3GBP353810-••K	994	96,5	96,7	96,4	0,83	576	6,9	3026	2,3	2,6	15,50	2500	76
355	M3BP 355LKB 6	3GBP353820-••K	995	96,5	96,6	96,1	0,81	668	7,7	3407	2,7	2,9	16,50	2600	76

Output kW	Motor type	Product code	Speed r/min	Efficiency IEC 60034-30-1; 2014 Full load 100%	3/4 load 75%	1/2 load 50%	Power factor Cosφ	Current I_N A	I_S/I_N	Torque T_N Nm	T_l/T_N	T_b/T_N	Moment of inertia J = 1/4 GD²kgm²	Weight kg	Sound pressure Level L_{PA} dB
1000 r/min = 6 poles				400 V 50 Hz				High-output design							
160	M3BP 315LKC 6	3GBP313830-••K	994	96,1	96,3	96,2	0,82	297	7,4	1537	2,7	2,9	9,20	1600	68

Technical data
IE4 cast iron motors, 3000, 1500, 1000 r/min

IP 55 - IC 411 - Insulation class F, temperature rise class B
IE4 efficiency class according to IEC 60034-30-1; 2014

Output kW	Motor type	Product code	Speed r/min	Efficiency IEC 60034-30-1; 2014 Full load 100%	3/4 load 75%	1/2 load 50%	Power factor Cosφ	Current I_N A	I_s/I_N	Torque T_N Nm	T_l/T_N	T_b/T_N	Moment of inertia J = 1/4 GD²kgm²	Weight kg	Sound pressure Level L_{PA} dB
3000 r/min = 2 poles				400 V 50 Hz				CENELEC-design							
75	M3BP 280SMB 2	3GBP281220-••M	2980	96,3	96,3	95,8	0,87	129	7,3	240	2,1	2,9	0,90	665	77
90	M3BP 280SMC 2	3GBP281230-••M	2981	96,5	96,4	95,9	0,88	153	8,0	288	2,5	3,1	1,150	725	77
110	M3BP 315SMB 2	3GBP311220-••M	2982	96,5	96,5	95,9	0,88	189	6,7	352	1,9	2,6	1,40	940	77
132	M3BP 315SMC 2	3GBP311230-••M	2986	96,9	97,0	96,7	0,88	226	7,9	422	2,4	3,0	1,70	1025	77
160	M3BP 315MLA 2	3GBP311410-••M	2983	97,1	97,3	97,1	0,90	268	7,3	512	2,2	2,7	2,10	1190	77
200	M3BP 315MLB 2	3GBP311420-••M	2983	97,1	97,4	97,3	0,90	333	6,8	640	1,9	2,6	2,20	1220	77
200 [1]	M3BP 355SMA 2	3GBP351210-••M	2985	97,0	96,8	96,1	0,90	336	7,6	640	2	3,1	3,00	1600	83
250	M3BP 315LKB 2	3GBP311820-••M	2982	96,9	97,2	97,2	0,91	413	7,9	800	2,5	2,7	2,90	1540	77
250 [1]	M3BP 355SMB 2	3GBP351220-••M	2983	97,3	97,4	97,1	0,90	415	7,6	800	2,2	3,0	3,40	1680	83
315 [1]	M3BP 355SMC 2	3GBP351230-••M	2984	96,8	96,8	96,3	0,89	533	7,8	1008	2,3	2,8	3,60	1750	83
355 [1]	M3BP 355MLA 2	3GBP351410-••M	2981	96,9	97,1	96,8	0,90	595	7,5	1137	2,3	2,6	4,10	2000	83

Output kW	Motor type	Product code	Speed r/min	Efficiency IEC 60034-30-1; 2014 Full load 100%	3/4 load 75%	1/2 load 50%	Power factor Cosφ	Current I_N A	I_s/I_N	Torque T_N Nm	T_l/T_N	T_b/T_N	Moment of inertia J = 1/4 GD²kgm²	Weight kg	Sound pressure Level L_{PA} dB
1500 r/min = 4 poles				400 V 50 Hz				CENELEC-design							
75	M3BP 280SMC 4	3GBP282230-••M	1487	96,2	96,6	96,3	0,86	130	7,8	481	2,8	2,9	1,85	725	72
90	M3BP 280MLA 4	3GBP282410-••M	1489	96,4	96,8	96,7	0,85	160	8,8	577	3,4	3,2	2,30	840	72
110	M3BP 315SMC 4	3GBP312230-••M	1491	96,8	97,0	96,7	0,85	194	7,8	704	2,4	3,1	2,90	1000	68
132	M3BP 315SMD 4	3GBP312240-••M	1490	96,9	97,1	96,8	0,85	234	7,9	846	2,6	3,2	3,20	1065	68
160	M3BP 315MLB 4	3GBP312420-••M	1490	96,7	96,9	96,6	0,87	278	7,9	1026	2,7	3,0	3,90	1220	68
200	M3BP 315LKB 4	3GBP312820-••M	1490	96,9	97,1	97,0	0,87	346	7,6	1282	2,5	2,9	5,0	1520	74
200	M3BP 355SMA 4	3GBP352210-••M	1491	97,0	97,1	96,8	0,87	345	7,3	1282	2,1	2,7	5,90	1610	74
250	M3BP 315LKC 4	3GBP312830-••M	1490	96,9	97,1	97,0	0,87	432	7,8	1601	2,3	3,0	5,50	1600	74
250	M3BP 355SMB 4	3GBP352220-••M	1491	97,1	97,2	97,0	0,87	433	7,8	1601	2,5	2,9	6,90	1780	74
315	M3BP 355SMC 4	3GBP352230-••M	1490	97,2	97,3	97,1	0,86	554	7,4	2017	2,8	2,9	7,20	1820	74
355	M3BP 355MLA 4	3GBP352410-••M	1491	96,9	97,1	96,8	0,87	616	7,9	2274	2,7	2,9	8,40	2140	78

Output kW	Motor type	Product code	Speed r/min	Efficiency IEC 60034-30-1; 2014 Full load 100%	3/4 load 75%	1/2 load 50%	Power factor Cosφ	Current I_N A	I_s/I_N	Torque T_N Nm	T_l/T_N	T_b/T_N	Moment of inertia J = 1/4 GD²kgm²	Weight kg	Sound pressure Level L_{PA} dB
1000 r/min = 6 poles				400 V 50 Hz				CENELEC-design							
45	M3BP 280SMB 6	3GBP283220-••M	992	95,4	95,7	95,3	0,85	80,9	6,9	434	2,4	2,6	2,20	680	65
55	M3BP 280SMC 6	3GBP283230-••M	990	95,4	95,7	95,4	0,85	99,4	6,8	506	2,4	2,6	2,85	725	65
75	M3BP 315SMC 6	3GBP313230-••M	994	96,3	96,5	96,2	0,83	138	7,0	721	2,2	2,8	4,90	1000	67
90	M3BP 315SMD 6	3GBP313240-••M	994	96,0	96,2	95,9	0,81	170	7,2	864	2,4	2,9	4,90	1040	67
110	M3BP 315MLB 6	3GBP313420-••M	994	96,4	96,6	96,4	0,83	202	6,9	1057	2,3	2,7	6,30	1200	68
132	M3BP 315LKA 6	3GBP313810-••M	993	96,4	96,6	96,4	0,82	243	6,9	1269	2,4	2,7	7,30	1410	68
160	M3BP 315LKC 6	3GBP313830-••M	994	96,7	96,9	96,8	0,82	297	7,4	1537	2,7	2,9	9,20	1600	68
160	M3BP 355SMB 6	3GBP353220-••M	995	96,5	96,5	96,1	0,82	294	7,0	1536	2,1	2,7	9,70	1680	73
200	M3BP 355SMC 6	3GBP353230-••M	995	96,5	96,7	96,4	0,82	367	7,3	1920	2,3	2,8	11,30	1820	73
250	M3BP 355MLB 6	3GBP353420-••M	995	96,6	96,8	96,7	0,83	456	7,1	2399	2,3	2,7	13,50	2180	73
315	M3BP 355LKA 6	3GBP353810-••M	994	96,6	96,7	96,5	0,83	576	6,9	3026	2,3	2,6	15,50	2500	76
355	M3BP 355LKB 6	3GBP353820-••M	995	96,7	96,7	96,3	0,81	668	7,7	3407	2,7	2,9	16,50	2600	76

[1] 3dB(A) sound pressure level reduction with unidirectional fan construction. Direction of rotation must be stated when ordering, see variant codes 044 and 045

Variant codes
Cast iron motors

Variant codes specify additional options and features to the standard motor. The desired features are listed as three-digit variant codes in the motor order. Note also that there are variants that cannot be used together.

Most of the variant codes apply to IE2, IE3, and IE4 motors. However, confirm the availability of variants for IE3 and IE4 motors with your ABB sales office before making an order.

		Frame size															
Code/Variants		71	80	90	100	112	132	160	180	200	225	250	280	315	355	400	450
Administration																	
530	Two-year extension on standard warranty	-	-	-	-	-	-	-	-	-	-	-	●	●	●	●	●
531	Sea freight packing	-	●	●	●	●	●	●	●	●	●	●	●	●	●	●	●
532	Packing of motor in vertical mounting position	-	-	-	-	-	-	-	-	●	●	●	●	●	-	-	-
533	Wooden sea freight packing	●	●	●	●	●	●	●	●	●	●	●	●	●	●	●	●
590	Mounting of customer supplied part other than coupling.	-	●	●	●	●	●	●	●	●	●	●	●	●	●	●	-
Balancing																	
417	Vibration acc. to Grade B (IEC 60034-14).	●	●	●	●	●	●	●	●	●	●	●	●	●	●	●	-
423	Balanced without key.	●	●	●	●	●	●	●	●	●	●	●	●	●	●	●	●
424	Full-key balancing	●	●	●	●	●	●	●	●	●	●	●	●	●	●	●	●
Bearings and Lubrication																	
036	Transport lock for bearings.	●	●	●	●	●	●	●	●	●	●	●	●	●	●	●	●
037	Roller bearing at D-end.	●	●	●	●	●	●	●	●	●	●	●	●	●	●	●	●
039	Cold-resistant grease	●	●	●	●	●	●	●	●	●	●	●	●	●	●	●	●
040	Heat-resistant grease	●	●	●	●	●	●	○	○	○	○	○	●	●	●	●	●
041	Bearings regreasable via grease nipples.	●	●	●	●	●	●	○	○	○	○	○	○	○	○	○	○
043	SPM compatible nipples for vibration measurement	●	●	●	●	●	●	○	○	○	○	○	○	○	○	○	○
057	2RS bearings at both ends.	●	●	●	●	●	●	●	●	●	●	●	-	-	-	-	-
058	Angular contact bearing at D-end, shaft force away from bearing.	●	●	●	●	●	●	●	●	●	●	●	●	●	●	●	●
059	Angular contact bearing at N-end, shaft force towards bearing.	●	●	●	●	●	●	●	●	●	●	●	●	●	●	●	●
060	Angular contact bearing at D-end, shaft force towards bearing.	-	-	-	-	-	-	-	-	-	-	-	●	●	●	●	●
061	Angular contact bearing at N-end, shaft force away from bearing.	-	-	-	-	-	-	-	-	-	-	-	●	●	●	●	●
107	Pt100 2-wire in bearings.	-	-	-	-	-	-	●	●	●	●	●	●	●	●	●	●
128	Double PT100, 2-wire in bearings	-	-	-	-	-	-	-	-	-	-	-	●	●	●	●	●
129	Double PT100, 3-wire in bearings	-	-	-	-	-	-	-	-	-	-	-	●	●	●	●	●
130	Pt100 3-wire in bearings.	-	-	-	-	-	-	-	-	-	-	-	●	●	●	●	●
188	63-series bearing in D-end	●	●	●	●	●	●	○	○	○	○	○	○	○	○	○	○
194	2Z bearings greased for life at both ends.	○	○	○	○	○	○	●	●	●	●	●	-	-	-	-	-
420	Bearing mounted PTC thermistors.	-	-	-	-	-	-	-	-	-	-	-	●	●	●	●	●
433	Outlet grease collector	-	-	-	-	-	-	-	-	-	-	-	●	●	●	●	●
506	Nipples for vibration measurement : SKF Marlin Quick Connect stud CMSS-2600-3	-	-	-	-	-	-	●	●	●	●	●	●	●	●	●	●
593	Bearings grease suitable for food and beverage industry.	●	●	●	●	●	●	●	●	●	●	●	●	●	●	●	●
654	Provision for vibration sensors (M8x1)	-	-	-	-	-	-	●	●	●	●	●	●	●	●	●	●
795	Lubrication information plate	-	-	-	-	-	-	●	●	●	●	●	-	-	-	-	-
796	Grease nipples JIS B 1575 PT 1/8 Type A	-	-	-	-	-	-	●	●	●	●	●	●	●	●	●	●
797	Stainless steel SPM nipples	●	●	●	●	●	●	●	●	●	●	●	●	●	●	●	●
798	Stainless steel grease nipples	-	-	-	-	-	-	●	●	●	●	●	●	●	●	●	●
799	Grease nipples flat type DIN 3404, thread M10x1	-	-	-	-	-	-	●	●	●	●	●	●	●	●	●	●
800	Grease nipples JIS B 1575 PT 1/8" pin type	-	-	-	-	-	-	●	●	●	●	●	●	●	●	●	●
Brakes																	
517	KFB holding brake	-	-	-	-	-	-	-	-	-	-	-	●	●	●	-	-
518	SFB-SH holding brake	-	-	-	-	-	-	-	-	-	-	-	●	●	●	●	-
Branch standard designs																	
142	Manilla connection.	-	-	●	●	●	●	●	●	●	●	●	●	●	-	-	-
172	Smoke venting specification, 300 °C, 1 hour, DOL use, class F300 according to EN 12101-3	-	-	-	-	-	-	-	-	-	-	-	●	●	●	●	-
173	Smoke venting specification, 200 °C, 2 hours, DOL use, class F200 according to EN 12101-3	-	-	-	-	-	-	-	-	-	-	-	●	●	●	●	-
174	Smoke venting specification, 400 °C, 2 hours, DOL use, class F400 according to EN 12101-3	-	-	-	-	-	-	-	-	-	-	-	●	●	●	●	-
177	Design for high ambient applications	-	-	-	-	-	-	●	●	●	●	●	-	-	-	-	-
178	Stainless steel / acid proof bolts.	●	●	●	●	●	●	●	●	●	●	●	●	●	●	●	●
204	Jacking bolts for foot mounted motors.	-	-	-	-	-	-	●	●	●	●	●	●	●	○	○	○
209	Non-standard voltage or frequency, (special winding).	●	●	●	●	●	●	●	●	●	●	●	●	●	●	●	●
386	Smoke venting specification, 200 °C, 2 hours, VSD use, Class F200 according to EN 12101-3.	-	-	-	-	-	-	-	-	-	-	-	●	●	●	●	-

○ = Included as standard | ● = Available as option | - = Not applicable

		Frame size															
Code/Variants		71	80	90	100	112	132	160	180	200	225	250	280	315	355	400	450
387	Smoke venting specification, 300 °C, 1 hour, VSD use, Class F300 according to EN 12101-3	-	-	-	-	-	-	-	-	-	-	-	●	●	●	●	-
389	Smoke Venting specification, 400 °C, 2 hours, VSD use, Class F400 according to EN 12101-3	-	-	-	-	-	-	-	-	-	-	-	●	●	●	●	-
392	Smoke Venting specification, 250 °C, 2 hours, DOL use, Class T250	-	-	-	-	-	-	-	-	-	-	-	●	●	●	●	-
393	Smoke venting specification, 250 °C, 2 hours, VSD use, Class T250	-	-	-	-	-	-	-	-	-	-	-	●	●	●	●	-
396	Motor designed for ambient temperature -20 °C to -40 °C, with space heaters (code 450/451 must be added)	●	●	●	●	●	●	●	●	●	●	●	●	●	●	●	●
397	Motor designed for ambient temperature -40 °C to -55 °C, with space heaters (code 450/451 must be added)	-	-	-	-	-	-	●	●	●	●	●	●	●	●	●	●
398	Motor designed for ambient temperature -20 °C to -40 °C	●	●	●	●	●	●	●	●	●	●	●	●	●	●	●	●
399	Motor designed for ambient temperature -40 °C to -55 °C	-	-	-	-	-	-	●	●	●	●	●	●	●	●	●	●
425	Corrosion protected stator and rotor core.	●	●	●	●	●	●	●	●	●	●	●	●	●	●	●	●
524	Special run-out tolerances on flange and shaft for close coupled pump applications.	-	-	-	-	-	-	-	-	-	-	-	●	●	●	-	-
Cooling system																	
044	Unidirectional fan for reduced noise level. Rotation clockwise seen from D-end. Available only for 2-pole motors.	-	-	-	-	-	-	-	-	-	-	-	●	●	●	●	●
045	Unidirectional fan for reduced noise level. Rotation counter clockwise seen from D-end. Available only for 2-pole motors.	-	-	-	-	-	-	-	-	-	-	-	●	●	●	●	●
068	Light alloy metal fan	●	●	●	●	●	●	●	●	●	●	●	●	●	●	●	●
075	Cooling method IC418 (without fan).	●	●	●	●	●	●	●	●	●	●	●	●	●	●	●	●
183	Separate motor cooling (fan axial, N-end).	●	●	●	●	●	●	●	●	●	●	●	●	●	●	●	●
206	Steel fan	-	●	●	●	●	●	●	●	●	●	●	●	●	●	●	-
422	Separate motor cooling (on top) with integrated fan motor	-	-	-	-	-	-	-	-	-	-	-	●	●	●	●	●
514	Separate motor cooling (fan on top)	-	-	-	-	-	-	-	-	-	-	-	●	●	●	●	●
791	Stainless steel fan cover	-	-	-	-	-	-	-	-	-	-	-	●	●	●	●	●
Coupling																	
035	Assembly of customer supplied coupling-half.	-	-	-	-	-	-	-	-	-	-	-	●	●	●	●	●
Documentation																	
141	Binding dimension drawing.	●	●	●	●	●	●	●	●	●	●	●	●	●	●	●	●
Drain holes																	
065	Plugged existing drain holes.	●	●	●	●	●	●	●	●	●	●	●	●	●	●	●	●
448	Draining holes with metal plugs.	-	-	-	-	-	-	-	-	-	-	-	●	●	●	●	●
Earthing Bolt																	
067	External earthing bolt.	●	●	●	●	●	●	○	○	○	○	○	○	○	○	○	○
525	External earthing bolts on motor feet	-	●	●	●	●	●	●	●	●	●	●	●	●	●	●	●
Heating elements																	
450	Heating element, 100-120 V	●	●	●	●	●	●	●	●	●	●	●	●	●	●	●	●
451	Heating element, 200 - 240 V	●	●	●	●	●	●	●	●	●	●	●	●	●	●	●	●
Insulation system																	
014	Winding insulation class H.	●	●	●	●	●	●	●	●	●	●	●	●	●	●	●	●
405	Special winding insulation for frequency converter supply.	●	●	●	●	●	●	●	●	●	●	●	●	●	●	●	●
406	Winding for supply > 690 <= 1000 volts	-	-	-	-	-	-	-	-	●	●	●	●	●	●	●	●
Marine																	
024	Fulfilling Bureau Veritas (BV) requirements, with certificate.	●	●	●	●	●	●	●	●	●	●	●	●	●	●	●	●
025	Fulfilling Det Norske Veritas (DNV) requirements, with certificate.	●	●	●	●	●	●	●	●	●	●	●	●	●	●	●	●
026	Fulfilling Lloyds Register of Shipping (LR) requirements, with certificate.	●	●	●	●	●	●	●	●	●	●	●	●	●	●	●	●
027	Fulfilling American Bureau of Shipping (ABS) requirements, with certificate.	●	●	●	●	●	●	●	●	●	●	●	●	●	●	●	●
049	Fulfilling Germanischer Lloyd (GL) requirements, with certificate.	●	●	●	●	●	●	●	●	●	●	●	●	●	●	●	●
050	Fulfilling Registro Italiano Navale (RINA) requirements, with certificate.	-	-	-	-	-	-	●	●	●	●	●	●	●	●	●	●
051	Fulfilling Russian Maritime Register of Shipping (RS) requirements, with certificate.	-	-	-	-	-	-	●	●	●	●	●	●	●	●	●	●
096	Fulfilling Lloyds Register of Shipping (LR) requirements, without certificate (non-essential duty only)	●	●	●	●	●	●	●	●	●	●	●	●	●	●	●	●
186	Fulfilling Det Norske Veritas (DNV) requirements, without certificate (non-essential duty only)	●	●	●	●	●	●	●	●	●	●	●	●	●	●	●	●
481	Fulfilling Nippon Kaiji Kyokai (NK) requirements, with certificate.	-	-	-	-	-	-	●	●	●	●	●	●	●	●	●	●
483	Fulfilling China Classification Societies (CCS) requirements (Beijing), with certificate.	●	●	●	●	●	●	●	●	●	●	●	●	●	●	●	●
484	Fulfilling Korea Register of Shipping (KR) requirements, with certificate.	-	-	-	-	-	-	●	●	●	●	●	●	●	●	●	●
491	Fulfilling Nippon Kaiji Kyokai (NK) requirements, without certificate.	-	-	-	-	-	-	-	●	●	●	●	●	●	●	●	●
492	Fulfilling Registro Italiano Navale (RINA) requirements, without certificate.	●	●	●	●	●	●	●	●	●	●	●	●	●	●	●	●
493	Fulfilling China Classification Societies (CCS) requirements (Beijing), without certificate.	●	●	●	●	●	●	●	-	-	-	●	●	●	●	●	●
494	Fulfilling Korea Register of Shipping (KR) requirements, without certificate.	-	-	-	-	-	-	●	●	●	●	●	●	●	●	●	●
496	Fulfilling Bureau Veritas (BV) requirements, without certificate(non-essential duty only)	●	●	●	●	●	●	●	●	●	●	●	●	●	●	●	●
497	Fulfilling Russian Maritime Register of Shipping (RS) requirements, without certificate.	-	-	-	-	-	-	●	●	●	●	●	-	-	-	-	-

○ = Included as standard | ● = Available as option | - = Not applicable

		Frame size															
Code/Variants		71	80	90	100	112	132	160	180	200	225	250	280	315	355	400	450
675	Fulfilling American Bureau of Shipping (ABS) requirements, without certificate (non-essential duty only)	●	●	●	●	●	●	●	●	●	●	●	●	●	●	●	●
676	Fulfilling Germanischer Lloyd (GL) requirements, without certificate (non-essential duty only)	●	●	●	●	●	●	●	●	-	-	●	●	●	●	●	●
Mounting arrangements																	
008	IM 2101 foot/flange mounted, IEC flange, from IM 1001 (B34 from B3).	●	●	●	●	●	●	-	-	-	-	-	-	-	-	-	-
009	IM 2001 foot/flange mounted, IEC flange, from IM 1001 (B35 from B3).	●	●	●	●	●	●	●	●	●	●	●	●	●	●	●	●
047	IM 3601 flange mounted, IEC flange, from IM 3001 (B14 from B5).	●	●	●	●	●	●	-	-	-	-	-	-	-	-	-	-
066	Modified for specified mounting position differing from IM B3 (1001), IM B5 (3001), B14 (3601), IM B35 (2001), IM B34 (2101)	●	●	●	●	●	●	●	●	●	●	●	●	●	●	●	●
305	Additional lifting lugs.	-	-	-	-	-	-	●	●	●	●	●	●	●	●	●	●
Noise reduction																	
055	Noise reduction cover for foot mounted motor	-	-	-	-	-	-	-	-	-	-	-	●	●	●	●	●
Painting																	
105	Paint thickness report.	●	●	●	●	●	●	●	●	●	●	●	●	●	●	●	●
114	Special paint color, standard grade	●	●	●	●	●	●	●	●	●	●	●	●	●	●	●	●
115	Painting system C4M acc. to ISO 12944-2: 1998.	●	●	●	●	●	●	●	●	●	●	●	●	●	●	●	●
168	Primer paint only.	●	●	●	●	●	●	●	●	●	●	●	●	●	●	●	●
303	Painted insulation layer on inside of the terminal boxes.	-	-	-	-	-	-	●	●	●	●	●	-	-	-	-	-
710	Thermally sprayed zink metallizing with acrylic top coat	●	●	●	●	●	●	●	●	●	●	●	●	●	●	●	●
711	Painting system C5-M very high, acc. to ISO 12944-2:1998	●	●	●	●	●	●	●	●	●	●	●	●	●	●	●	●
712	Painting system C5-M according to Petrobras specification.	●	●	●	●	●	●	●	●	●	●	●	●	●	●	●	●
713	Painting system according Total Egina specification.	●	●	●	●	●	●	●	●	●	●	●	●	●	●	●	●
754	Painting system C5M acc. to ISO 12944-2:1998	●	●	●	●	●	●	●	●	●	●	●	●	●	●	●	●
Protection																	
005	Protective roof, vertical motor, shaft down.	●	●	●	●	●	●	●	●	●	●	●	●	●	●	●	●
072	Radial seal at D-end. Not possible for 2-pole , 280 and 315 frames	●	●	●	●	●	●	●	●	●	●	●	●	●	-	-	-
073	Sealed against oil at D-end.	-	-	-	-	-	-	●	●	●	●	●	●	●	●	●	●
158	Degree of protection IP65.	●	●	●	●	●	●	●	●	●	●	●	●	●	●	●	-
211	Weather protected, IP xx W	●	●	●	●	●	●	●	●	●	●	●	-	-	-	-	-
250	Degree of protection IP66	●	●	●	●	●	●	●	●	●	●	●	●	●	●	●	-
401	Protective roof, horizontal motor.	-	-	-	-	-	-	●	●	●	●	●	●	●	●	●	●
403	Degree of protection IP56.	●	●	●	●	●	●	●	●	●	●	●	●	●	●	●	-
404	Degree of protection IP56, without fan and fan cover.	●	●	●	●	●	●	●	●	●	●	●	-	-	-	-	-
434	Degree of protection IP56, open deck.	-	-	-	-	-	-	-	-	-	-	-	●	●	●	●	●
520	Motor protection cover made of glass fiber. Vertical motor, shaft down.	-	-	-	-	-	-	-	-	-	-	-	●	●	●	●	-
783	Labyrinth sealing at D-end.	-	-	-	-	-	-	●	●	●	●	●	●	●	○	○	○
784	Gamma-seal at D-end.	●	●	●	●	●	●	○	○	-	○	○	-	-	-	-	-
Rating & instruction plates																	
002	Restamping voltage, frequency and output, continuous duty.	●	●	●	●	●	●	●	●	●	●	●	●	●	●	●	●
004	Additional text on std rating plate (max 12 digits on free text line).	-	-	●	-	●	●	●	●	●	●	●	●	●	●	●	●
095	Restamping output (maintained voltage, frequency), intermittent duty.	●	●	●	●	●	●	●	●	●	●	●	●	●	●	●	●
098	Stainless rating plate.	●	●	●	●	●	●	○	○	○	○	○	○	○	○	-	-
126	Tag plate	●	●	●	●	●	●	●	●	●	●	●	●	●	●	●	●
135	Mounting of additional identification plate, stainless.	●	●	●	●	●	●	●	●	●	●	●	●	●	●	●	●
138	Mounting of additional identification plate, aluminium.	●	●	●	●	●	●	-	-	-	-	-	-	-	-	-	-
139	Additional identification plate delivered loose.	●	●	●	●	●	●	●	●	●	●	●	●	●	●	●	●
159	Additional plate with text “Made in ....”	●	●	●	●	●	●	●	●	●	●	●	●	●	●	●	●
160	Additional rating plate affixed.	●	●	●	●	●	●	●	●	●	●	●	●	●	●	●	●
161	Additional rating plate delivered loose.	●	●	●	●	●	●	●	●	●	●	●	●	●	●	●	●
163	Frequency converter rating plate. Rating data according to quotation.	●	●	●	●	●	●	●	●	●	●	●	●	●	●	●	●
181	Rating plate with ABB standard loadability values for VSD operation. Other auxiliaries for VSD operation to be selected as necessary.	-	-	-	-	-	-	-	-	-	-	-	●	●	●	●	●
528	Rating plate sticker	●	●	●	●	●	●	-	-	-	-	-	●	●	●	●	●
Shaft & rotor																	
069	Two shaft extensions according to catalog drawings.	●	●	●	●	●	●	●	●	●	●	●	●	●	●	●	●
070	Special shaft extension at D-End, standard shaft material	-	●	●	●	●	●	●	●	●	●	●	●	●	●	●	●
131	Motor delivered with half key (key not exceeding shaft diameter)	●	●	●	●	●	●	●	●	●	●	●	-	-	-	-	-
155	Cylindrical shaft extension, D-end, without key-way.	●	●	●	●	●	●	●	●	●	●	●	●	●	●	●	●
164	Shaft extension with closed keyway	○	○	○	○	○	○	○	○	○	○	○	●	●	●	●	-
165	Shaft extension with open keyway	-	-	-	-	-	-	●	●	●	●	●	○	○	○	○	○
410	Shaft material stainless steel	●	●	●	●	●	●	-	-	-	-	-	●	●	●	●	●
591	Special shaft extension according to customer specification.	●	●	●	●	●	●	●	●	●	●	●	●	●	●	●	●
600	Special shaft extension at N-end, standard shaft material.	●	●	●	●	●	●	●	●	●	●	●	●	●	●	●	●
630	Shaft material certificate 3.1/3.2 according to EN10204:2004	-	-	-	-	-	●	●	●	●	●	●	●	●	●	●	●
Standards and Regulations																	
010	Fulfilling CSA Safety Certificate.	-	-	-	-	-	-	●	●	●	●	●	●	●	●	●	●

○ = Included as standard | ● = Available as option | - = Not applicable

		Frame size															
Code/Variants		71	80	90	100	112	132	160	180	200	225	250	280	315	355	400	450
242	Fulfilling CSA Energy Efficiency Verification IE2 (code 010 included)	-	-	-	-	-	-	●	●	●	●	●	-	-	-	-	-
331	IE1 motor not for sale for use in EU	●	●	●	●	●	●	●	●	●	●	●	●	●	●	●	●
408	Fulfilling EISA Subtype II efficiency requirements, CC031A.	-	●	●	●	●	●	●	●	●	●	●	●	●	-	-	-
500	Fulfilling Korean MEPS efficiency regulations	-	-	-	-	-	-	●	●	●	●	●	●	●	●	-	-
540	China energy label	●	●	●	●	●	●	●	●	●	●	●	●	●	●	-	-
542	NBR design	-	-	-	-	-	-	●	●	●	●	●	●	●	●	-	-
543	Australian MEPS	-	●	●	●	●	●	●	●	●	●	●	●	●	●	-	-
548	Certificate of conformity according TR-CU 004/2011 for customs union RU, KZ, BY.	●	●	●	●	●	●	●	●	●	●	●	●	●	●	●	●
Stator winding temperature sensors																	
120	KTY 84-130 (1 per phase) in stator winding.	-	-	-	-	-	-	●	●	●	●	●	●	●	●	●	●
121	Bimetal detectors, break type (NCC), (3 in series), 130 °C, in stator winding	●	●	●	●	●	●	●	●	●	●	●	●	●	●	●	●
122	Bimetal detectors, break type (NCC), (3 in series), 150 °C, in stator winding	●	●	●	●	●	●	●	●	●	●	●	●	●	●	●	●
123	Bimetal detectors, break type (NCC), (3 in series), 170 °C, in stator winding	●	●	●	●	●	●	●	●	●	●	●	●	●	●	●	●
124	Bimetal detectors, break type (NCC), (3 in series), 140 °C, in stator winding	-	-	-	-	-	-	●	●	●	●	●	●	●	●	●	●
125	Bimetal detectors, break type (NCC), (2x3 in series), 150 °C, in stator winding	-	-	-	-	-	-	●	●	●	●	●	●	●	●	●	●
127	Bimetal detectors, break type (NCC), (3 in series, 130 °C & 3 in series, 150 °C), in stator winding	●	●	●	●	●	●	●	●	●	●	●	●	●	●	●	●
435	PTC - thermistors (3 in series), 130 °C, in stator winding	●	●	●	●	●	●	●	●	●	●	●	●	●	●	●	●
437	PTC - thermistors (3 in series), 170 °C, in stator winding	●	●	●	●	●	●	●	●	●	●	●	●	●	●	●	●
438	PTC - thermistors (3 in series), 190 °C, in stator winding	-	-	-	-	-	-	-	-	-	-	-	●	●	●	●	●
439	PTC - thermistors (2x3 in series), 150 °C, in stator winding	●	●	●	●	●	●	●	●	●	●	●	●	●	●	●	●
441	PTC - thermistors (3 in series, 130 °C & 3 in series, 150 °C), in stator winding	●	●	●	●	●	●	●	●	●	●	●	●	●	●	●	●
442	PTC - thermistors (3 in series, 150 °C & 3 in series, 170 °C), in stator winding	●	●	●	●	●	●	●	●	●	●	●	●	●	●	●	●
445	Pt100 2-wire in stator winding, 1 per phase	●	●	●	●	●	●	●	●	●	●	●	●	●	●	●	●
446	Pt100 2-wire in stator winding, 2 per phase	-	-	-	-	-	-	●	●	●	●	●	●	●	●	●	●
502	Pt100 3-wire in stator winding, 1 per phase	-	-	-	-	-	-	●	●	●	●	●	●	●	●	●	●
503	Pt100 3-wire in stator winding, 2 per phase	-	-	-	-	-	-	●	●	●	●	●	●	●	●	●	●
511	PTC thermistors (2 x 3 in series), 130 °C, in stator winding	-	-	-	-	-	-	●	●	●	●	●	●	●	●	●	●
515	Pt100 3-wire in stator winding, 3 per phase	-	-	-	-	-	-	-	-	-	-	-	●	●	●	●	●
Terminal box																	
015	Motor supplied in D connection.	●	●	●	●	●	●	●	●	●	●	●	-	-	-	-	-
017	Motor supplied in Y connection.	●	●	●	●	●	●	●	●	●	●	●	-	-	-	-	-
019	Larger than standard terminal box.	●	●	●	●	●	●	-	-	-	-	-	●	●	●	●	-
020	Detached terminal box.	-	-	-	-	-	-	-	-	-	-	-	●	●	●	●	●
021	Terminal box LHS (seen from D-end).	●	●	●	●	●	●	●	●	●	●	●	●	●	●	●	-
022	Cable entry LHS (seen from D-end).	●	●	●	●	●	●	●	●	●	●	●	●	●	●	●	●
157	Terminal box degree of protection IP65.	-	-	-	-	-	-	●	●	●	●	●	●	●	●	●	-
180	Terminal box RHS (seen from D-end).	●	●	●	●	●	●	●	●	●	●	●	●	●	●	●	-
230	Standard metal cable gland.	●	●	●	●	●	●	●	●	●	●	●	○	○	○	○	○
231	Cable entry with clamping device.	-	-	-	-	-	-	-	-	-	-	-	●	●	●	●	●
277	Cable sealing end unit, size small for C-opening	-	-	-	-	-	-	-	-	-	-	-	●	-	-	-	-
278	Cable sealing end unit, size medium for D-opening	-	-	-	-	-	-	-	-	-	-	-	-	●	●	●	●
279	Cable sealing end unit, size large for D-opening	-	-	-	-	-	-	-	-	-	-	-	-	●	●	●	●
292	Adapter C-C	-	-	-	-	-	-	-	-	-	-	-	●	-	-	-	-
293	Adapter D-D	-	-	-	-	-	-	-	-	-	-	-	-	●	●	-	-
294	Adapter E-D	-	-	-	-	-	-	-	-	-	-	-	-	●	●	●	●
295	Adapter E-2D	-	-	-	-	-	-	-	-	-	-	-	-	●	●	●	○
296	Adapter E-3D	-	-	-	-	-	-	-	-	-	-	-	-	-	-	-	●
351	Terminal block turned according to cable entry	-	-	-	-	-	-	-	-	-	-	-	●	●	-	●	●
375	Standard plastic cable gland	●	●	●	●	●	●	-	-	-	-	-	-	-	-	-	-
380	Separate terminal box for temperature detectors, std. material	-	-	-	-	-	-	●	●	●	●	●	●	●	●	●	●
400	4 x 90 degr turnable terminal box.	●	●	●	●	●	●	○	○	○	○	○	○	○	○	-	-
413	Extended cable connection, no terminal box.	-	-	-	-	-	-	●	●	●	●	●	●	●	●	●	●
418	Separate terminal box for auxiliaries, standard material.	●	●	●	●	●	●	●	●	●	●	●	●	●	●	●	●
444	Adapter E-2E	-	-	-	-	-	-	-	-	-	-	-	-	-	-	-	●
447	Top mounted separate terminal box for monitoring equipment.	-	-	-	-	-	-	-	-	-	-	-	●	●	●	●	●
466	Terminal box at N-end.	-	-	-	-	-	-	●	●	●	●	●	●	●	●	●	●
467	Lower than standard terminal box and rubber extended cable. Cable length 2 m	-	-	-	-	-	-	●	●	●	●	●	-	-	-	-	-
468	Cable entry from D-end.	●	●	●	●	●	●	-	-	-	-	-	●	●	●	●	-
469	Cable entry from N-end.	●	●	●	●	●	●	●	●	●	●	●	●	●	●	●	-
526	Existing cable entries plugged	○	○	○	○	○	○	○	○	○	○	○	○	●	●	-	-
553	Terminal box degree of protection IP66.	●	●	●	●	●	●	●	●	●	●	●	●	●	●	●	-
554	Painted steel flange for cable glands drilled and tapped according to order.	-	●	●	●	●	●	●	●	●	●	●	●	●	●	●	●
555	Aluminum flange for cable glands drilled and tapped according to order.	-	●	●	●	●	●	●	●	●	●	●	●	●	●	●	●
557	Nickel plated cable glands mounted according to order.	-	●	●	●	●	●	●	●	●	●	●	●	●	●	●	●
567	Separate terminal box material: cast Iron	-	-	-	-	-	-	○	○	○	○	○	●	●	●	●	●

○ = Included as standard | ● = Available as option | - = Not applicable

		Frame size															
Code/Variants		71	80	90	100	112	132	160	180	200	225	250	280	315	355	400	450
568	Separate terminal box for heating elements, std. material	-	-	-	-	-	-	●	●	●	●	●	●	●	●	●	●
569	Separate terminal box for brakes	-	-	-	-	-	-	-	-	-	-	-	●	●	●	●	●
624	Prepared for BSP cable glands.	-	●	●	●	●	●	●	●	●	●	●	●	●	●	●	-
727	Stainless steel flange for cable glands drilled and tapped according to order.	-	-	-	-	-	-	●	●	●	●	●	●	●	●	●	●
729	Aluminum non-drilled flange for cable glands	-	-	-	-	-	-	●	●	●	●	●	●	●	●	●	●
730	Prepared for NPT cable glands.	●	●	●	●	●	●	●	●	●	●	●	●	●	●	●	●
731	Two standard metal cable glands.	●	●	●	●	●	●	●	●	●	●	●	○	○	○	○	○
740	Prepared for PG cable glands.	-	-	-	-	-	-	●	●	●	●	●	-	-	-	-	-
742	Protective cover for accessory terminal block in main terminal box.	-	-	-	-	-	-	-	-	-	-	-	●	●	●	●	●
743	Painted non-drilled flange in steel for cable glands	-	-	-	-	-	-	●	●	●	●	●	●	●	●	●	●
744	Stainless steel non-drilled flange for cable glands.	-	-	-	-	-	-	●	●	●	●	●	●	●	●	●	●
745	Painted steel flange equipped with nickel plated brass cable glands	-	-	-	-	-	-	●	●	●	●	●	●	●	●	●	●
746	Stainless steel cable flange equipped with standard nickel plated brass cable glands	-	-	-	-	-	-	●	●	●	●	●	●	●	●	●	●
Testing																	
140	Test confirmation.	○	○	○	○	○	○	●	●	●	●	●	-	-	-	-	-
145	Type test report from a catalogue motor, 400V 50Hz.	●	●	●	●	●	●	●	●	●	●	●	●	●	●	●	●
146	Type test with report for one motor from specific delivery batch.	●	●	●	●	●	●	●	●	●	●	●	●	●	●	●	●
148	Routine test report.	●	●	●	●	●	●	●	●	●	●	●	●	●	●	●	●
150	Customer witnessed testing. Specify test procedure with other codes.	●	●	●	●	●	●	●	●	●	●	●	●	●	●	●	●
153	Reduced test for classification society.	-	-	-	-	-	-	●	●	●	●	●	-	-	-	-	-
222	Torque/speed curve, type test and multi-point load test with report for one motor from specific delivery batch.	●	●	●	●	●	●	●	●	●	●	●	●	●	●	●	●
560	Shaft voltage test.	●	●	●	●	●	●	●	●	●	●	●	●	●	●	●	●
561	Overspeed test.	●	●	●	●	●	●	●	●	●	●	●	●	●	●	●	●
562	Overvoltage test.	●	●	●	●	●	●	●	●	●	●	●	●	●	●	●	●
760	Vibration level test	●	●	●	●	●	●	●	●	●	●	●	●	●	●	●	●
761	Vibration spectrum test for one motor from specific delivery batch.	-	-	-	-	-	-	●	●	●	●	●	●	●	●	●	●
762	Noise level test for one motor from specific delivery batch.	●	●	●	●	●	●	●	●	●	●	●	●	●	●	●	●
763	Noise spectrum test for one motor from specific delivery batch.	-	-	-	-	-	-	●	●	●	●	●	●	●	●	●	●
764	Test for one motor from specific delivery batch with ABB frequency converter available at ABB test field. ABB standard test procedure.	-	-	-	-	-	-	●	●	●	●	●	●	●	●	●	●
Variable speed drives																	
429	Separate motor cooling (fan top, N-end) and 1024 pulse tacho (Leine & Linde 861) mounted.	-	-	-	-	-	-	-	-	-	-	-	●	●	●	●	●
470	Prepared for hollow shaft pulse tacho (L&L equivalent).	-	-	-	-	-	-	●	●	●	●	●	●	●	●	●	●
472	1024 pulse tacho (L&L 861007455-1024).	-	-	-	-	●	●	●	●	●	●	●	●	●	●	●	●
473	2048 pulse tacho (L&L 861007455-2048).	-	-	-	-	●	●	●	●	●	●	●	●	●	●	●	●
474	Separate motor cooling (axial fan, N-end) and prepared for hollow shaft tacho (L&L equivalent)	-	-	-	-	-	-	●	●	●	●	●	●	●	●	●	●
476	Separate motor cooling (axial fan, N-end) and 1024 pulse tacho (L&L 861007455-1024)	-	-	-	-	-	-	●	●	●	●	●	●	●	●	●	●
477	Separate motor cooling (axial fan, N-end) and 2048 pulse tacho (L&L 861007455-2048)	-	-	-	-	-	-	●	●	●	●	●	●	●	●	●	●
478	Separate motor cooling (fan on top, N-end) and prepared for hollow shaft tacho (L&L equivalent)	-	-	-	-	-	-	-	-	-	-	-	●	●	●	●	●
479	Mounting of other type of pulse tacho with shaft extension, tacho not included.	-	-	-	-	-	-	-	-	-	-	-	●	●	●	●	●
486	Separate motor cooling (fan top, N-end) and prepared for DC-tacho.	-	-	-	-	-	-	-	-	-	-	-	●	●	●	●	●
510	Separate motor cooling (fan top, N-end) and 2048 pulse tacho (Leine & Linde 861) mounted.	-	-	-	-	-	-	-	-	-	-	-	●	●	●	●	●
582	1024 pulse tacho, GHK912-GBR-1024, BEI IDEACOD	-	-	-	-	-	-	-	-	-	-	-	●	●	●	●	●
583	2048 pulse tacho, GHK912-GBR-2048, BEI IDEACOD	-	-	-	-	-	-	-	-	-	-	-	●	●	●	●	●
658	Special tacho mounted, price category 1	-	-	-	-	-	-	-	-	-	-	-	●	●	●	●	●
659	Special tacho mounted, price category 2	-	-	-	-	-	-	-	-	-	-	-	●	●	●	●	●
660	Special tacho mounted, price category 3	-	-	-	-	-	-	-	-	-	-	-	●	●	●	●	●
701	Insulated bearing at N-end.	-	-	-	-	-	-	●	●	●	●	●	●	●	●	●	●
704	EMC cable entry.	●	●	●	●	●	●	●	●	●	●	●	●	●	●	●	●
Y/D starting																	
117	Terminals for Y/D start at both speeds (two speed windings).	-	-	-	-	-	-	●	●	●	●	●	●	●	-	-	-
118	Terminals for Y/D start at high speed (two speed windings).	-	-	-	-	-	-	-	-	-	-	-	●	●	-	-	-
119	Terminals for Y/D start at low speed (two speed windings).	-	-	-	-	-	-	-	-	-	-	-	●	●	-	-	-

○ = Included as standard | ● = Available as option | - = Not applicable

Mechanical design
Motor frame and drain holes

Motor frame
The motor frame is made of cast iron, and the standard design includes cast iron feet, bearing housing, and terminal box. Integrated cast iron feet provide rigid mounting and minimize vibration.

Motors can be supplied for foot mounting, flange mounting,and combinations of these.

Drain holes
Motors that will be operated in very humid or wet environments, and especially under intermittent duty, should be provided with drain holes. The IM designation, such as IM 3031, determines the intended mounting arrangement for the motor.

Motor sizes 71 - 450 are fitted with drain holes and closable plugs. The plugs are open on delivery. When mounting the motors, ensure that the drain holes face downwards.

In the case of vertical mounting, the upper plug must be hammered home completely. In very dusty environments, both plugs should be hammered home.

When mounting arrangement differs from foot mounted IM B3, mention variant code 066 when ordering.

See variant codes 065 and 066 under the heading “Drain holes”.

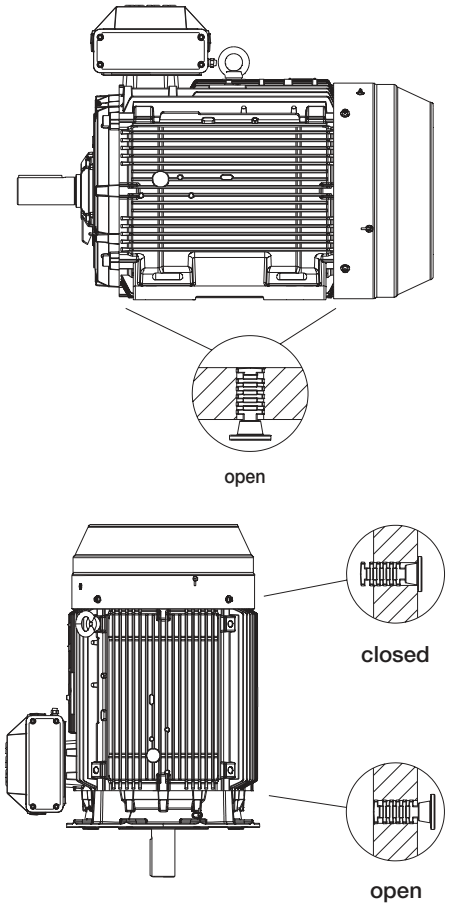

As standard, motor sizes 71 - 450 are delivered with drain holes and closable plugs.

Heating elements

Heating elements are installed into windings to keep them free of corrosion in humid conditions. The required power of heating elements is shown in the table. You can order heating elements with variant code 450 or 451.

Motor size	71	80	90	100	112	132	160	180
Power (W)	8	8	25	25	25	25	25	50

Motor size	200	225	250	280	315	355	400	450
Power (W)	50	50	50	60	2x60	2x60	2x60	2x100

Bearings

Process performance motors are normally fitted with single-row deep-groove ball bearings, as shown in the table below.

If the bearing at the D-end is replaced with a roller bearing (NU- or NJ-), higher radial forces can be handled. Roller bearings are suitable for belt-drive applications and can be ordered with variant code 037.

When high axial forces are involved, angular-contact ball bearings should be used. When ordering a motor with an angular-contact ball bearing, specify also the method of mounting and the direction and magnitude of axial force. The variant codes for ordering angular-contact ball bearings are 058 and 059.

Standard and alternative designs

		Standard design		Alternative designs		
		Deep groove ball bearings		Roller bearings (037)	Ang. contact ball bearings (058, 059)	
Motor size	Number of poles	D-end	N-end	D-end	D-end	N-end
71	2 - 8	6203-2Z/C3	6202-2Z/C3	NU 203 ECP/C3	7203 B	7202 B
80	2 - 8	6204-2Z/C3	6203-2Z/C3	NU 204 ECP/C3	7204 B	7203 B
90	2 - 8	6205-2Z/C3	6204-2Z/C3	NU 205 ECP/C3	7205 B	7204 B
100	2 - 8	6206-2Z/C3	6205-2Z/C3	NU 206 ECP/C3	7206 B	7205 B
112	2 - 8	6206-2Z/C3	6205-2Z/C3	NU 206 ECP/C3	7206 B	7205 B
132	2 - 8	6208-2Z/C3	6208-2Z/C3	NU 208 ECP/C3	7208 B	7208 B
160	2 - 12	6309/C3	6209/C3	NU 309 ECP/C3	7309 B	7209 B
180	2 - 12	6310/C3	6209/C3	NU 310 ECP/C3	7310 B	7209 B
200	2 - 12	6312/C3	6210/C3	NU 312 ECP/C3	7312 B	7210 B
225	2 - 12	6313/C3	6212/C3	NU 313 ECP/C3	7313 B	7212 B
250	2 - 12	6315/C3	6213/C3	NU 315 ECP/C3	7315 B	7213 B
280	2	6316/C3	6316/C3	[1]	7316 B	7616 B
	4 - 12	6316/C3	6316/C3	NU 316 ECP/C3	7316 B	7316 B
315	2	6316/C3	6316/C3	[1]	7316 B	7316 B
	4 - 12	6319/C3	6316/C3	NU 319 ECP/C3	7319 B	7316 B
355	2	6316M/C3	6316M/C3	[1]	7316 B	7316 B
	4 - 12	6322/C3	6316/C3	NU 322 ECP/C3	7322 B	7316 B
400	2	6317M/C3	6317M/C3	[1]	7317 B	7317 B
	4 - 12	6324/C3	6319/C3	NU 324 ECP/C3	7324 B	7319 B
450	2	6317M/C3	6317M/C3	[1]	7317 B	7317 B
	4 - 12	6326M/C3	6322/C3	NU 326 ECP/C3	7326 B	7322 B

[1] On request

Axially-locked bearings

All motors are equipped as standard with an axially locked bearing at the D-end.

Transport locking

Motors with roller bearings or an angular-contact ball bearing are fitted with a transport lock before dispatch to prevent damage to bearings during transport. A warning sign is attached to motors larger than 250 when transport locking is used.

Locking may also be fitted in other cases if severe transport conditions are expected.

Bearing seals

These tables present the standard and alternative sizes and types of bearing seals per motor size.

Bearing seals for motor sizes 71 – 250

		Standard design		Alternative design
		Axial seal		Radial seal at D-end (DIN 3760)
Motor size	Number of poles	D-end	N-end	Variant code 072
71	2 - 12	VA16	Labyrinth seal	17x28x7
80	2 - 12	VA20	Labyrinth seal	20x40x7
90	2 - 12	VA25	Labyrinth seal	25x42x7
100	2 - 12	VA30	Labyrinth seal	30x47x7
112	2 - 12	VA30	Labyrinth seal	30x47x7
132	2 - 12	VA40	VA40	40x62x7
160	2 - 12	RB45	RB45	45x62x8
180	2 - 12	RB50	RB45	50x68x8
200	2 - 12	RB60	RB50	60x80x8
225	2 - 12	RB65	RB60	65x85x10
250	2 - 12	RB75	RB65	75x95x10

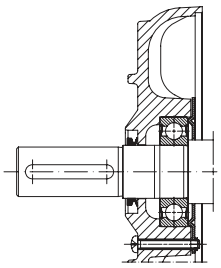

Motor sizes 71 - 132

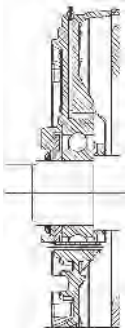

Motor sizes 160 - 250

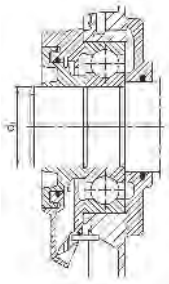

Motor sizes 280 - 450
Labyrinth seal

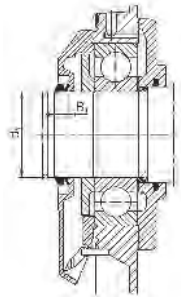

V-ring

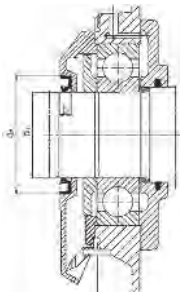

Radial seal

Bearing seals for motor sizes 280 - 450

Motor size	Number of poles	Standard design		Alternative design	
		D-end	N-end	D-end	N-end
		D-end	N-end	D-end	N-end
280	2	Labyrinth seal	VS80	-	Labyrinth seal
280	4 - 12	VS80	VS80	Labyrinth seal	Labyrinth seal
	4 - 12			Radial seal 80x110x10	Radial seal 80x110x10
315	2	Labyrinth seal	VS80	-	Labyrinth seal
315 SM, ML	4 - 12	VS95	VS80	Labyrinth seal	Labyrinth seal
	4 - 12			Radial seal 95x125x10	Radial seal 80x110x10
315 LK	4 - 12	Labyrinth seal	VS80	-	Labyrinth seal
	4 - 12			-	Radial seal 80x110x10
355	2	Labyrinth seal	VS80	-	Labyrinth seal
355	4 - 12	Labyrinth seal	VS80	-	Labyrinth seal
400	2	Labyrinth seal	Labyrinth seal	-	-
400	4 - 12	Labyrinth seal	VS95	-	Labyrinth seal
450	2	Labyrinth seal	Labyrinth seal	-	-
450	4 - 12	Labyrinth seal	Labyrinth seal	-	-

Table is valid for IE2 motors
Axial seal:
RB45...75 = Gamma-ring
VA16…65 = V-ring, type A
VS80…95 = V-ring, type S

Bearing life and lubrication

Bearing life

The nominal life L_{10h} of a bearing is defined according to ISO 281 as the number of operating hours achieved or exceeded by 90 % of identical bearings in a large test series under specified conditions. 50 % of bearings achieve at least five times this lifetime.
The calculated bearing life L_{10h} for power transmission by means of coupling is for horizontally mounted motors in sizes 280 to 315 ≥ 200,000 hours.

Lubrication

On delivery, motors in frame size 160 and above are prelubricated with high-quality grease. Before first start-up, see instructions for relubricaton and recommended grease in the Manual for low voltage motors delivered together with the motor, or see the lubrication plate on the motor.

Motors with bearings greased for life

Motors in frame sizes 71 - 132 are equipped with bearings greased for life, while this is available as an option for frame sizes 160 - 250. Bearings are lubricated with high-quality, high-temperature grease. Bearing types are stated on the rating plate.
The approximate lifetime of bearings in four-pole motors is about 40 0000 duty hours. Lifetime is subject to the load conditions of the application run by the motor.

Lubrication intervals

ABB follows the L_1 principle in defining lubrication intervals. This means that 99 % of motors will make the interval time.
The lubrication intervals can also be calculated according to the L_{10} principle, which usually gives twice as long interval times. L_{10} values are available from ABB at request.

Motors with relubrication nipples

In frame sizes 280 - 450, the bearing system allows the use of a valve disc to ease lubrication. Motors are lubricated while running. The grease outlet opening has closing valves at both ends. These should be opened before greasing and closed 1 - 2 hours after regreasing. This ensures that the construction is tight and bearings remain dust- and dirt-free.
A grease-collection method can be used optionally.
The following tables show lubrication intervals according to the L_1 principle for various nominal speeds in 25 °C ambient temperature. These values apply to horizontally mounted motors (B3) with 80 °C bearing temperature and high-quality grease containing lithium-complex soap and mineral or PAO-oil.

Lubrication intervals in duty hours for ball bearings

Frame size	Amount of grease g/bearing	Amount of grease g/N-end	Output kW	Speed 3600 r/min	Speed 3000 r/min	Output kW	Speed 1800 r/min	Speed 1500 r/min	Output kW	Speed 1000 r/min	Output kW	Speed 500-900 r/min
Ball bearings												
Lubrication intervals in duty hours												
160	13	13	≤ 18.5	9000	12 000	≤ 15	18 000	21 500	≤ 11	24 000	all	24 000
160	13	13	> 18.5	7500	10 000	> 15	15 000	18 000	> 11	22 500	all	24 000
180	15	15	≤ 22	7000	9000	≤ 22	15 500	18 500	≤ 15	24 000	all	24 000
180	15	15	> 22	6000	8500	> 22	14 000	17 000	> 15	21 000	all	24 000
200	20	15	≤ 37	5500	8000	≤ 30	14 500	17 500	≤ 22	23 000	all	24 000
200	20	15	> 37	3000	5500	> 30	10 000	12 000	> 22	16 000	all	20 000
225	23	20	≤ 45	4000	6500	≤ 45	13 000	16 500	≤ 30	22 000	all	24 000
250	23	20	> 45	1500	2500	> 45	5000	6000	> 30	8000	all	10 000
250	30	23	≤ 55	2500	4000	≤ 55	9000	11 500	≤ 37	15 000	all	18 000
250	30	23	> 55	1000	1500	> 55	3500	4500	> 37	6000	all	7000
280	35	35	all	1900	3200		-	-		-		-
280	40	40		-	-	all	7800	9600	all	13 900	all	15 000
315	35	35	all	1900	3200		-	-		-		-
315	55	40		-	-	all	5900	7600	all	11 800	all	12 900
355	35	35	all	1900	3200		-	-		-		-
355	70	40		-	-	all	4000	5600	all	9600	all	10 700
400	40	40	all	1500	2700		-			-	-	-
400	85	55		-	-	all	3200	4700	all	8600	all	9700
450	40	40	all	1500	2700		-	-		-		-
450	95	70		-	-	all	2500	3900	all	7700	all	8700

Lubrication intervals in duty hours for roller bearings

Frame size	Amount of grease g/bearing	Amount of grease g/N-end	Output kW	Speed 3600 r/min	Speed 3000 r/min	Output kW	Speed 1800 r/min	Speed 1500 r/min	Output kW	Speed 1000 r/min	Output kW	Speed 500-900 r/min
Roller bearings												
Lubrication intervals in duty hours												
160	13	13	≤ 18.5	4500	6000	≤ 15	9000	10 500	≤ 11	12 000	all	12 000
160	13	13	> 18.5	3500	5000	> 15	7500	9000	> 11	11 000	all	12 000
180	15	15	≤ 22	3500	4500	≤ 22	7500	9000	≤ 15	12 000	all	12 000
180	15	15	> 22	3000	4000	> 22	7000	8500	> 15	10500	all	12 000
200	20	15	≤ 37	2750	4000	≤ 30	7000	8500	≤ 22	11 500	all	12 000
200	20	15	> 37	1500	2500	> 30	5000	6000	> 22	8000	all	10 000
225	23	20	≤ 45	2000	3000	≤ 45	6500	8000	≤ 30	11 000	all	12 000
225	23	20	> 45	750	1250	> 45	2500	3000	> 30	4000	all	5000
250	30	23	≤ 55	1000	2000	≤ 55	4500	5500	≤ 37	7500	all	9000
250	30	23	> 55	500	750	> 55	1500	2000	> 37	3000	all	3500
280	35	35	all	900	1600		-	-		-		-
280	40	40		-	-	all	4000	5300	all	7000	all	8500
315	35	35	all	900	1600		-	-		-		-
315	55	40		-	-	all	2900	3800	all	5900	all	6500
355	35	35	all	900	1600		-	-		-		-
355	70	40		-	-	all	2000	2800	all	4800	all	5400
400	40	40	all	-	1300		-	-		-		-
400	85	55		-	-	all	1600	2400	all	4300	all	4800
450	40	40	all	-	1300		-	-		-		-
450	95	70		-	-	all	1300	2000	all	3800	all	4400

Radial forces

Permissible loading on the shaft

The following table shows permissible radial forces on the shaft in Newtons, assuming zero axial force, a 25 °C ambient temperature, and normal conditions. The values are given for a calculated bearing life of 20 000 and 40 000 hours per motor size.

These calculated values further assume mounting position IM B3 (foot-mounted), with force directed sideways. In some cases, the strength of the shaft affects permissible forces.

Permissible loads of simultaneous radial and axial forces can be supplied on request.

If the radial force is applied between points X0 and Xmax, the permissible force FR can be calculated with the following formula:

$$F_R = F_{X0} - \frac{X}{E}(F_{X0} - F_{Xmax})$$

Where:

E: length of the shaft extension in the standard version

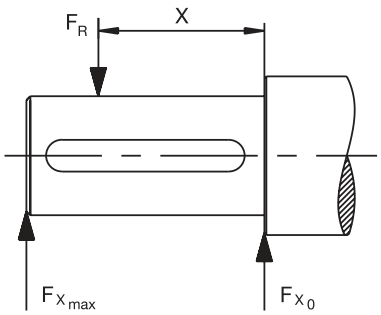

Permissible radial forces, motor sizes 71 – 132

			Basic design with deep groove ball bearings				Roller bearings			
			Mounting arrangement IM B3				Mounting arrangement IM B3			
			20,000 h		40,000 h		20,000 h		40,000 h	
Motor size	No. of poles	Length of shaft extension E (mm)	F_{X0}(N)	F_{Xmax}(N)	F_{X0}(N)	F_{Xmax}(N)	F_{X0}(N)	F_{Xmax}(N)	F_{X0}(N)	F_{Xmax}(N)
71	2	30	540	460	420	360	1285	650	1040	650
	4	30	700	605	555	480	1615	650	1310	650
	6	30	780	665	620	530	1640	650	1450	650
	8	30	860	730	685	580	1640	600	1580	600
80	2	40	710	600	385	350	1910	865	1555	865
	4	40	940	810	725	625	2335	865	1945	865
	6	40	1060	895	840	710	2335	865	2160	865
	8	40	1185	1020	940	810	2335	865	2335	865
90	2	50	820	690	650	545	2205	1330	1790	1330
	4	50	1035	870	820	690	2715	1330	2205	1330
	6	50	1185	995	940	790	3065	1330	2490	1330
	8	50	1300	1095	1035	870	3340	1330	2715	1330
100	2	60	1130	925	900	735	2905	1900	2360	1900
	4	60	1425	1165	1135	925	3575	1900	2905	1900
	6	60	1635	1335	1295	1060	4040	1900	3280	1900
	8	60	1820	1520	1445	1205	4460	1900	3620	1900
112	2	60	1170	980	925	775	3000	1970	2435	1970
	4	60	1475	1235	1170	980	3695	1970	3000	1970
	6	60	1690	1310	1340	1120	4170	1970	3390	1970
	8	60	1860	1310	1475	1235	4550	1970	3695	1970
132	2	80	1840	1500	1460	1190	4255	3465	3455	2815
	4	80	2320	1890	1840	1500	5240	4265	4255	3465
	6	80	2660	2165	2110	1715	5915	3680	4805	3680
	8	80	2925	2380	2320	1890	6450	3680	5240	3680

Permissible radial forces, motor sizes 160 - 280

Motor size	Poles	Length of shaft extension E (mm)	Ball bearings				Roller bearings			
			20,000 h		40,000 h		20,000 h		40,000 h	
			F_{X0}(N)	F_{Xmax}(N)	F_{X0}(N)	F_{Xmax}(N)	F_{X0}(N)	F_{Xmax}(N)	F_{X0}(N)	F_{Xmax}(N)
160 MLA	2	110	3540	2740	2955	2285	7100	4300	6140	4300
	4	110	4000	3100	3325	2570	8000	4300	6870	4300
	6	110	4170	3200	3440	2655	8600	4300	7270	4300
	8	110	4600	3585	3855	2985	9300	4300	7955	4300
160 MLB	2	110	3540	2740	2955	2270	7085	4300	6070	4300
	4	110	4085	3300	3370	2725	8300	4300	7055	4300
	6	110	4100	3355	3400	2755	8600	4300	7300	4300
	8	110	4200	3270	3455	2670	9000	4300	7570	4300
160 MLC	2	110	3400	2600	2855	2200	6800	4300	5885	4300
	4	110	3700	3000	3070	2485	7800	4300	6640	4300
	6	110	3600	2900	2870	2325	8000	4300	6700	4300
	8	110	4170	3370	3370	2725	9000	4300	7585	4300
160 MLD	2	110	3585	2900	3000	2440	7100	4300	6140	4300
	4	110	3400	2755	2755	2240	7600	4300	6370	4300
160 MLE	2	110	3185	2570	2640	2140	6785	4300	5770	4300
180 MLA	2	110	4100	3385	3455	2825	8125	5500	7025	5500
	4	110	4270	3485	3525	2885	8600	5500	7300	5500
	6	110	4700	3800	3855	3155	9400	5500	7900	5500
	8	110	4785	3900	3870	3170	9800	5500	8255	5500
180 MLB	2	110	4170	3400	3470	2825	7900	5500	6770	5500
	4	110	4185	3400	3440	2810	8500	5500	7200	5500
	6	110	4370	3570	3525	2885	9000	5500	7600	5500
180 MLC	4	110	3700	3055	3010	2470	7900	5500	6655	5440
200 MLA	2	110	5600	4685	4700	3925	10900	9100	9470	7900
	4	110	6285	5200	5240	4370	12500	9550	10700	8900
	6	110	6800	5700	5700	4770	13600	9550	11670	9550
	8	110	6800	5700	5600	4685	14100	9550	12000	9550
200 MLB	2	110	5670	4700	4700	3925	11000	9200	9500	7900
	4	110	5700	4700	4700	3925	12000	9550	10185	8500
	6	110	6400	5370	5300	4425	13200	9550	11200	9385
200 MLC	2	110	5000	4185	4185	3500	10400	8700	8900	7455
	4	110	5400	4500	4425	3685	11600	9550	9800	8200
	6	110	5800	4885	4740	3955	12500	9550	10600	8800
200 MLD	2	110	4985	4170	4170	3485	10400	8700	8900	7400
225 SMA	2	110	6400	5400	5355	4500	13300	10700	11500	9700
	4	140	7300	5900	6155	4970	15400	10250	13200	10250
	6	140	7600	6200	6370	5140	16400	10250	14000	10250
	8	140	8500	6900	7100	5725	17900	10250	15300	10250
225 SMB	2	110	6100	5185	5155	4340	13000	10700	11200	9455
	4	140	7085	5700	5885	4755	15100	10250	12900	10250
	6	140	7100	5700	5840	4700	16000	10250	13500	10250
	8	140	8000	6485	6600	5340	17300	10250	14700	10250
225 SMC	2	110	5600	4700	4685	3940	12600	10600	10770	9070
	4	140	6400	5200	5300	4285	14500	10250	12385	10000
225 SMD	2	110	5500	4640	4600	3880	12420	10460	10640	8960
	4	140	5800	4700	4725	3800	13500	10250	11400	9270
250 SMA	2	140	7700	6285	6500	5285	17100	10900	14900	10900
	4	140	8700	7000	7300	5900	19800	13800	17000	13785
	6	140	9400	7600	7800	6355	21600	13800	18400	13800
	8	140	9600	7800	7900	6400	22700	13800	19300	13800
250 SMB	2	140	7100	5800	6000	4885	16700	10900	14400	10900
	4	140	7800	6300	6470	5240	18900	13800	16200	13100
	6	140	8900	7200	7355	5955	21200	13800	18000	13800
250 SMC	2	140	6800	5500	5670	4600	16300	10900	14000	10900
	4	140	7400	6000	6055	4900	18100	13800	15400	12485
	6	140	8200	6600	6670	5400	20300	13800	17200	13800
280 SM_	2	140	7300	6000	5800	4900	20400	6000	16500	6000
	4	140	9200	7800	7300	6200	25100	9200	20300	9200
	6	140	10600	8900	8400	7000	28300	9200	23000	9200
	8	140	11700	9200	9200	7800	30900	9200	25100	9200
280 ML_	2	140	7400	6200	5800	5000	20600	6200	16700	6200
	4	140	9200	7900	7300	6200	25000	9500	20300	9500
	6	140	10500	9000	8300	7100	28300	9400	22900	9400
	8	140	11600	9500	9200	7900	30800	9500	25000	9500

Permissible radial forces, motor sizes 315 - 450

Motor size	Poles	Length of shaft extension E (mm)	Ball bearings				Roller bearings			
			20,000 h		40,000 h		20,000 h		40,000 h	
			F_{x0}(N)	F_{Xmax}(N)	F_{x0}(N)	F_{Xmax}(N)	F_{x0}(N)	F_{Xmax}(N)	F_{x0}(N)	F_{Xmax}(N)
315 SM_	2	140	7300	6000	5800	4950	20300	6000	16500	6000
	4	170	11400	9400	9000	7450	32500	9600	26600	9600
	6	170	13000	9600	10300	8500	37000	9600	30000	9600
	8	170	14400	9600	11400	9400	40300	9600	32700	9600
315 ML_	2	140	7400	6400	5850	5050	20600	5850	16700	5850
	4	170	11500	9700	9100	7650	32700	13600	26500	13600
	6	170	13200	11100	10400	8800	36900	13600	29900	13600
	8	170	14500	12200	11500	9700	40200	13600	32600	13600
315 LK_	2	140	7400	6550	5800	5150	20800	5550	16800	5550
	4	170	11500	10000	9100	7850	33100	13350	26800	13350
	6	170	13200	11400	10450	9050	37300	13350	30300	13350
	8	170	14600	12600	11550	10000	40800	13350	33100	13350
355 SM_	2	140	7350	6450	5750	5050	20600	7200	16700	7200
	4	210	15200	12600	12000	9950	45500	14000	36900	14000
	6	210	17500	14000	13800	11400	51400	14000	41700	14000
	8	210	19300	14000	15250	12600	56000	14000	45500	14000
355 ML_	2	140	7350	6550	5750	5100	20800	6750	16800	6750
	4	210	15300	12900	12000	10100	45900	13600	37200	13600
	6	210	17600	13600	13900	11600	51500	13600	42100	13600
	8	210	19400	13600	15300	12900	56000	13600	45900	13600
355 LK_	2	140	7350	6650	5650	5100	21000	6550	17000	6550
	4	210	15200	13000	11850	10200	46000	13000	37300	13000
	6	210	17500	13000	13700	11900	52000	13000	42000	13000
	8	210	19400	13000	15200	13000	56500	13000	46000	13000
400 L_	2	170	7650	6850	4400	3900	23900	9050	19350	9050
	4	210	15600	13550	12150	10550	52500	16000	43300	16000
	6	210	17800	15450	13850	12000	60000	16000	48800	16000
	8	210	19700	16000	15350	13350	65700	16000	53200	16000
400 LK_	2	170	7650	6850	4400	3900	23900	9050	19350	9050
	4	210	15600	11500	12150	10550	52500	11500	43300	11500
	6	210	17800	11500	13850	11500	60000	11500	48800	11500
	8	210	19700	11500	15350	11500	65700	11500	53200	11500
450 L_	2	170	7400	6700	3500	3300	24000	7500	19000	7500
	4	210	17000	15200	13000	11600	62000	25000	50000	25000
	6	210	19000	17000	14000	13000	70000	24000	56000	24000
	8	210	21300	19000	16500	14600	76000	23000	62000	23000

Axial forces

The following tables present permissible axial forces on the shaft in Newtons, assuming zero radial force, a 25 °C ambient temperature, and normal conditions. The values are given for a calculated bearing life of 20,000 and 40,000 hours per motor size.

At 60 Hz, the values must be reduced by 10 percent, and for two-speed motors, the higher speed determines permissible axial force. Permissible loads of simultaneous radial and axial forces can be supplied on request.

For axial force F_{AD}, it is assumed that the D-bearing is locked with a locking ring.

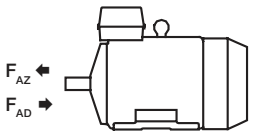

Mounting arrangement IM B3

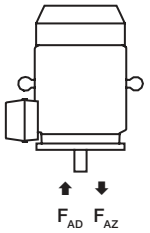

Mounting arrangement IM V1

Permissible axial forces, motor sizes 71 - 132

			Mounting arrangement IM B3				Mounting arrangement IM V1			
			Deep groove ball bearings				Deep groove ball bearings			
		Length of shaft extension	20,000 h		40,000 h		20,000 h		40,000 h	
Motor size	Poles	E (mm)	F_{AD}(N)	F_{AZ}(N)	F_{AD}(N)	F_{AZ}(N)	F_{AD}(N)	F_{AZ}(N)	F_{AD}(N)	F_{AZ}(N)
71	2	30	615	285	505	175	630	275	520	165
	4	30	760	430	615	285	790	410	645	265
	6	30	870	540	695	365	890	525	720	355
	8	30	960	630	765	435	985	615	785	415
80	2	40	880	300	735	155	915	280	770	135
	4	40	1075	495	880	300	1130	455	935	260
	6	40	1215	635	985	405	1270	600	1040	370
	8	40	1330	750	1070	490	1400	705	1140	450
90	2	50	780	500	620	340	840	455	680	300
	4	50	985	705	775	495	1070	650	860	440
	6	50	1140	860	890	610	1225	800	975	555
	8	50	1265	985	985	705	1355	925	1075	645
100	2	60	925	570	735	350	1285	510	1060	290
	4	60	1480	860	1190	570	1600	780	1305	490
	6	60	1690	1070	1350	730	1815	995	1470	650
	8	60	1865	1245	1480	860	1995	1160	1610	775
112	2	60	1155	595	935	375	1290	505	1070	280
	4	60	1445	885	1155	595	1595	785	1300	495
	6	60	1655	1095	1315	755	1810	995	1465	650
	8	60	1830	1270	1445	885	1985	1170	1600	780
132	2	80	1765	965	1420	620	1925	855	1580	510
	4	80	2210	1410	1755	955	2420	1270	1965	815
	6	80	2535	1735	2000	1200	2770	1580	2235	1045
	8	80	2800	2000	2205	1405	3055	1835	2455	1235

Permissible axial forces, motor sizes 160 - 280

			Mounting arrangement IM B3				Mounting arrangement IM V1			
			Deep groove ball bearings				Deep groove ball bearings			
		Length of shaft extension	20,000 h		40,000 h		20,000 h		40,000 h	
Motor size	Poles	E (mm)	F_{AD}(N)	F_{AZ}(N)	F_{AD}(N)	F_{AZ}(N)	F_{AD}(N)	F_{AZ}(N)	F_{AD}(N)	F_{AZ}(N)
160 MLA	2	110	2850	2850	2325	2325	3100	2578	2570	2048
	4	110	3450	3450	2775	2775	3820	3150	3120	2450
	6	110	3690	3690	2970	2970	4100	3410	3325	2635
	8	110	4155	4155	3315	3315	4440	3845	3640	3045
160 MLB	2	110	2850	2850	2325	2325	3120	2570	2580	2030
	4	110	3435	3435	2760	2760	3880	3085	3180	2385
	6	110	3600	3600	2880	2880	4120	3240	3360	2480
	8	110	3750	3750	2970	2970	4140	3450	3340	2650
160 MLC	2	110	2775	2775	2280	2280	3080	2500	2560	1980
	4	110	3150	3150	2535	2535	3620	2770	2985	2135
	6	110	3135	3135	2490	2490	3680	2700	3005	2025
	8	110	3675	3675	2910	2910	4240	3260	3445	2465
160 MLD	2	110	2865	2865	2330	2330	3220	2540	2665	1985
	4	110	2900	2900	2320	2320	3420	2470	2820	1870
160 MLE	2	110	2500	2500	2025	2025	2900	2150	2420	1670
180 MLA	2	110	3300	3300	2700	2700	3660	2940	3060	2340
	4	110	3600	3600	2920	2920	4160	3150	3460	2450
	6	110	4140	4140	3320	3320	4800	3675	3940	2815
	8	110	4220	4220	3360	3360	4960	3740	4040	2820
180 MLB	2	110	3340	3340	2725	2725	3760	2960	3125	2320
	4	110	3580	3580	2900	2900	4220	3095	3500	2375
	6	110	3800	3800	3040	3040	4500	3285	3700	2485
180 MLC	4	110	3220	3220	2560	2560	3880	2660	3220	2000
200 MLA	2	110	4460	4460	3640	3640	5000	3965	4200	3125
	4	110	5000	5260	4260	4260	5000	4680	5000	3640
	6	110	5000	5480	4720	4720	5000	5265	5000	4065
	8	110	5000	5880	4700	4700	5000	5195	5000	3955
200 MLB	2	110	4440	4440	3620	3620	5000	3905	4220	3085
	4	110	4720	4720	3840	3840	5000	4060	4700	3120
	6	110	5000	5480	4420	4420	5000	4800	5000	3660
200 MLC	2	110	3940	3940	3180	3180	4600	3385	3880	2665
	4	110	4480	4480	3620	3620	5000	3775	4520	2875
	6	110	4980	4980	3980	3980	5000	4165	5000	3105
200 MLD	2	110	3940	3940	3200	3200	4660	3370	3925	2635
225 SMA	2	110	4980	4980	4060	4060	5000	4375	4780	3455
	4	140	5000	6080	4920	4920	5000	5445	5000	4225
	6	140	5000	6520	5000	5260	5000	5735	5000	4395
	8	140	5000	7420	5000	5960	5000	6535	5000	5095
225 SMB	2	110	4860	4860	3960	3960	5000	4245	4780	3345
	4	140	5000	5880	4780	4780	5000	5175	5000	3995
	6	140	5000	6020	4840	4840	5000	5155	5000	3915
	8	140	5000	6940	5000	5560	5000	6055	5000	4635
225 SMC	2	110	4380	4380	3540	3540	5000	3670	4440	2900
	4	140	5000	5240	4260	4260	5000	4445	5000	3425
225 SMD	2	110	4320	4320	3480	3480	5000	3590	4400	2790
	4	140	4800	4800	3820	3820	5000	3895	5000	2935
250 SMA	2	140	6000	6080	4920	4920	6000	5345	5840	4225
	4	140	6000	7140	5820	5820	6000	6300	6000	4920
	6	140	6000	7880	6000	6380	6000	6950	6000	5350
	8	140	6000	8200	6000	6600	6000	7125	6000	5385
250 SMB	2	140	5620	5620	4540	4540	6000	4830	5640	3810
	4	140	6000	6320	5100	5100	6000	5325	6000	4085
	6	140	6000	7480	6000	6040	6000	6370	6000	4830
250 SMC	2	140	5260	5260	4220	4220	6000	4395	5400	3415
	4	140	5960	5960	4760	4760	6000	4900	6000	3700
	6	140	6000	6860	5520	5520	6000	5575	6000	4135
280 SM_	2	140	6200	4250	4900	2900	7550	3150	6200	1800
	4	140	8000	6000	6250	4250	9600	4550	7800	2750
	6	140	7250	9250	7150	5150	11150	5500	9000	3350
	8	140	10300	8300	7950	5950	12200	7000	9850	4700
280 ML_	2	140	6100	4100	4800	2800	8150	2750	6800	1400
	4	140	7800	5800	6000	4000	10450	4050	8650	2250
	6	140	8950	6950	6900	4900	12350	4750	10250	2600
	8	140	10000	8000	7700	5700	13450	5800	11050	3450

Permissible axial forces, motor sizes 315 - 450

Motor size	Poles	Length of shaft extension E (mm)	Mounting arrangement IM B3				Mounting arrangement IM V1			
			Deep groove ball bearings				Deep groove ball bearings			
			20,000 h		40,000 h		20,000 h		40,000 h	
			F_{AD}(N)	F_{AZ}(N)	F_{AD}(N)	F_{AZ}(N)	F_{AD}(N)	F_{AZ}(N)	F_{AD}(N)	F_{AZ}(N)
315 SM_	2	140	6180	4200	4850	2850	7950	2600	6600	1300
	4	170	9400	7400	7250	5250	11750	5500	9550	3300
	6	170	10900	8900	8350	6350	13600	6300	11050	3750
	8	170	12000	10000	9200	7000	15350	7900	12450	5000
315 ML_	2	140	6050	4050	4750	2750	8650	2300	7300	[1]
	4	170	9250	7250	7100	5100	12500	5050	10300	2900
	6	170	10650	8650	8100	6100	14900	5800	12350	3250
	8	170	11500	9900	8900	6800	15400	6300	13600	3400
315 LK_	2	140	6000	3950	4650	2650	9100	1350	7750	[1]
	4	170	9100	7150	7000	5000	13100	3850	10900	1700
	6	170	10500	8500	7950	5950	15700	4100	13100	1550
	8	170	11750	9750	8900	6900	16900	6300	14100	3450
355 SM_	2	140	3050	6850	1750	5550	6350	4250	4950	2900
	4	210	8600	12400	5900	9700	13250	8600	10450	5850
	6	210	10550	14350	7300	11100	15650	9580	12350	6270
	8	210	12200	16000	8550	12350	17350	12500	13600	8900
355 ML_	2	140	2900	6700	1600	5400	7100	3700	5750	2350
	4	210	8360	12150	5650	9450	14600	7950	11850	5150
	6	210	10100	13900	6900	10700	18050	8600	14700	5300
	8	210	12000	15800	7300	11000	21100	11650	17000	7600
355 LK_	2	140	2650	6450	1350	5150	8250	2650	6900	1300
	4	210	8200	12000	5450	9250	15650	6600	12850	3800
	6	210	9900	13700	6700	10500	19100	7050	15800	3750
	8	210	11450	15250	7800	11600	21200	8700	17500	5000
400 L, LK_	2	170	2150	7150	[1]	5800	8650	2150	7220	[1]
	4	210	7100	13100	4300	10300	16050	6400	13150	3400
	6	210	8850	14850	5500	11500	18450	6750	15100	3400
	8	210	10450	16450	6750	12750	20100	8350	16450	4700
450 L_	2	170	1800	6800	[1]	5500	11500	[1]	10000	[1]
	4	210	7600	13500	4500	10500	20000	4400	17700	1200
	6	210	9000	15000	5600	11500	26000	3700	22200	[1]
	8	210	10800	16800	7000	12900	27800	5500	23700	1350

[1] On request.

Terminal box
Standard terminal box

Degree of protection and mounting options
The degree of protection for the standard terminal box is IP 55. By default, terminal boxes are mounted on top of the motor at D-end. In motor sizes 71 - 132, the terminal box is integrated in motor frame. On request, the terminal box can also be mounted on the left or right side regardless of motor size (see Mounting options).

Turnability
The standard terminal boxes for motor sizes 160 - 400 can be turned 4*90º. In sizes 71 to 132, turning is not possible in the standard motor, but 2*180º turning is available as an option (variant code 022).

Cable entries
The terminal box is provided with tapped holes for cable glands. No cable glands are included as standard, the entry holes are closed with blanking plugs made of plastic. Very large motors have angle adapters and cable sealing units as standard. Please refer to the table on the next page for further information about the amount and size of threaded holes, plugs and cable sealing units provided as standard.
Different types of cable glands are available as option. Please refer to the terminal box alternatives section for more details.

Cable type and terminations
If no cable type is specified in the order, it will be a PVC-insulated non-armored cable, and its termination parts are determined as shown in the following table.

Terminations are suitable for copper and aluminum cables (Al-cables on request for motor sizes 160 to 250). Cables are connected to terminals by cable lugs, which are not included in the delivery.

Ordering
To ensure the delivery of desired terminations for the motor, state the cable type, quantity, size, and outer diameter when ordering. Non-standard designs of terminal boxes, such as non-standard size or higher degree of protection, are available as options.

See section Variant codes for all options available.

Standard delivery

Standard delivery if no other information is provided. Note: For other network voltages and/or side-mounted motors, contact your ABB sales office.

Motor size	Pole number	Terminal box type	Size of gland plate opening on terminal box	45° angle adapter	Amount and size of threaded plugged holes or cable end sealing unit	Cable outer diameter mm	Max. connect-able core cross-section mm²/phase	Number and size of terminal bolts,
IE2 motors								
71	2-8	-	-	-	2xM16x1.5	2xØ4-12	1x2.5	6xM4
80	2-8	-	-	-	2xM25x1.5	2xØ10-18	1x4	6xM4
90	2-8	-	-	-	2xM25x1.5	2xØ10-18	1x6	6xM5
100 - 132	2-8	-	-	-	2xM32x1.5	2xØ14-24	1x10	6xM5
160 - 180	2-8	63	B	-	2xM40x1.5	2xØ22-32	1x35	6xM6
200 - 250	2-8	160	C	-	2xM63x1.5	2xØ35-45	1x70	6xM10
280 SM_	2-8	210	C	-	2xM63x1.5	2xØ35-45	2x150	6xM12
280 ML_	2-4	370	D	-	2xM63x1.5	2xØ35-45	2x240	6xM12
280 ML_	6-8	210	C	-	2xM63x1.5	2xØ35-45	2x150	6xM12
315 SM_, ML_	2-8	370	D	-	2xM63x1.5	2xØ35-45	2x240	6xM12
315 LKA, LKB	2-4	370	D	-	2xM63x1.5	2xØ35-45	2x240	6xM12
315 LKC	2-4	750	E	E-D	Medium	2xØ48-60	4x240	6xM12
315 LK_	6-8	370	D	-	2xM63x1.5	2xØ35-45	2x240	6xM12
355 SMA - SMC	2-4	750	E	E-D	Medium	2xØ48-60	4x240	6xM12
355 SMA, SMB	6-8	370	D	-	2xM63x1.5	2xØ35-45	2x240	6xM12
355 SMC	6	750	E	E-D	Medium	2xØ48-60	4x240	6xM12
355 SMC	8	370	D	-	2xM63x1.5	2xØ35-45	2x240	6xM12
355 ML_, LK_	2-4	750	E	E-D	Medium	2xØ60-80	4x240	6xM12
355 ML_, LK_	6-8	750	E	E-D	Medium	2xØ48-60	4x240	6xM12
400	2-6	750	E	E-2D	2 x large	2xØ60-80	4x240	6xM12
400	8	750	E	E-D	Medium	2xØ48-60	4x240	6xM12
450 LA	2-4	1200	E	E-2D	2 x large	2xØ60-80	6x240	6xM12
450 LB, LC	2-4	1200	E	E-2D	2 x large	4xØ60-80	6x240	6xM12
450 LA	6	750	E	E-D	Medium	2xØ60-80	4x240	6xM12
450 LB, LC	6	1200	E	E-D	Medium	2xØ60-80	6x240	6xM12
450	8	750	E	E-D	Medium	2xØ60-80	4x240	6xM12
IE3 and IE4 motors								
280	2-6	210	C	-	2xM63x1.5	2xØ35-45	2x150	M12
315	2-6	370	D	-	2xM63x1.5	2xØ35-45	2x240	M12
355 SM_	2-4	750	E	E-D	Medium	2xØ48-60	4x240	M12
355 SM_	6	370	D	-	2xM63x1.5	2xØ35-45	2x240	M12
355 ML_, LK_	2-6	750	E	E-D	Medium	2xØ48-60	4x240	M12
Auxiliary cable entries								
160 - 180	2-8				2xM20x1.5	Ø4-12		
200 - 250	2-8				2xM20x1.5	Ø4-12		
280 - 450	2-8				2xM20x1.5	Ø4-12		

Motor size	Earthing on frame	Earthing in main terminal box
71 - 112	M4	M4
132	M5	M5
160 - 250	clamp	M6
280 - 400	M10	2xM10
450	M10	4xM12

Terminal box
Terminal box dimensions

For motor sizes 71 to 132 the terminal box is integrated in motor frame and the dimensions for terminal boxes can be found in the motor dimension drawings in ABB Library.
To match the correct terminal box with motor sizes 160 - 450, find the motor type and correspondent terminal box type on the previous page. The box types and heir dimensions are presented on this page.

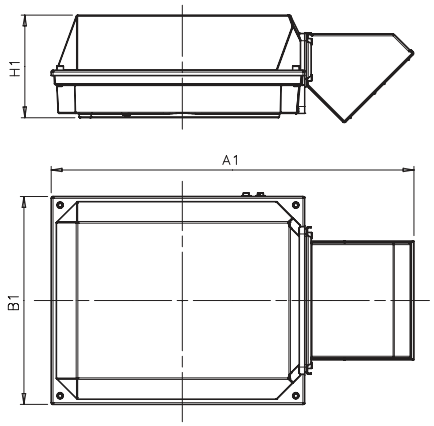

Terminal box type 1200 + adapter

Terminal box type 63 and 160

Terminal box types acc. to current capacity	A1	B1	H1	Gland plate opening
63	248	248	109	B
160	291	302	154	C
210	416	306	177	C
370	451	347	200	D
750 with E-D adapter	686	413	219	D
750 without E-D adapter	523	413	219	E
1200 with E-2D adapter	1000	578	285	2xD
1200 without E-2D adapter	697	578	285	E
1200 with E-2E adapter	1195	578	285	2xE
1200 with E-3D adapter	1250	578	285	3xD

Dimensions for terminal box inlets

Corresponds to motor sizes 160 and above

Terminal box types 210 and 370

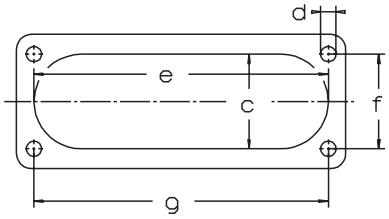

Flange opening	c mm	e mm	f mm	g mm	d thread type
B	31	120	30	120	M6
C *)	71	194	62	193	M6
C **)	67	193	62	193	M8
D	100	300	80	292	M10
E	115	370	100	360	M12

Terminal box type 750 + adapter

Note! The C flange is different depending on frame size
*) for frame sizes 200-225
**) for frame size 280

Terminal box
Cable glands

The motors are delivered as standard with plugged cable entries or cable sealing units as described in the previous section. There is available a broad selection of different type of cable glands, which are suitable for different types of cable and outer diameter ranges.

Size of threaded opening for cable gland	Cable gland(s) nickel plated brass, variant code 230 or 731	EMC Cable gland(s) nickel plated brass, variant code 704	Cable gland(s) plastic, variant code 375 or 376
Metric (std)	Cable outer diameter, mm	Cable outer diameter, mm	Cable outer diameter, mm
M16 x 1.5	4-12	4-8	4-12
M20 x 1.5	4-12	4-12	4-12
M25 x 1.5	10-18	10-18	10-18
M32 x 1.5	14-24	14-24	14-24
M40 x 1.5	22-32	22-32	22-32
M50 x 1.5	26-35	26-35	26-35
M63 x 1.5 *)	35-45	35-45	35-45
M75 x 1.5	46-62	46-62	not available

Threaded openings for cable glands with NPT thread (variant code 730)

The standard delivery for the motors are provided with openings for cable glands with metric threads as listed in the section describing the standard terminal box. If NPT threads will be needed, the variant code 730 is to be ordered. If nothing else is stated on the order, the sizes in tables below will be delivered.

Motor frame size	Main cable entries	NPT plug
80-112	1 x ¾”	-
132	2 x ¾”	1 x ¾”
160-180	2 x 1 ¼”	1 x 1 ¼”
200-250	2 x 1 ½”	1 x 1 ½”
280	2 x 2”	1 x 2”
315-450	2 x 3”	1 x 3”

Motor frame size	Cable entries for auxiliaries	NPT plug
80-112	2 x ¾”	2 x ¾”
132	1 x ¾”	1 x ¾”
160-450	2 x ¾”	2 x ¾”

Gland plates with threaded openings for cable glands of nonstandard size

If the standard size of threaded openings for cable glands is not suitable then nonstandard size openings are also available, either by fitting the reducers to make the openings smaller or by increasing the amount or size of holes. The maximum possible size and amount for each gland plate size is listed below. Threaded openings of non-standard size can be ordered by using variant codes 554, 555 and 727.

Gland plate size	Maximum amount and size of threaded holes
B	2 x M40
C	2 x M63
D	2 x M90 or 3 x M75
E	2 x M90 or 4 x M75

Terminal box
Terminal boxes and boards

The pictures below show standard terminal boxes and the corresponding terminal boards for various motor sizes.

Motor sizes 71 - 132

Integrated terminal box for motor sizes 71 - 132. Tapped holes for cable entries.

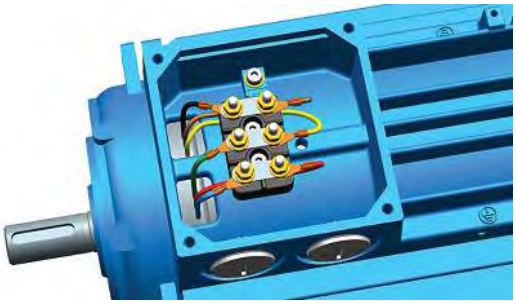

Terminal board for motor sizes 71 - 80.

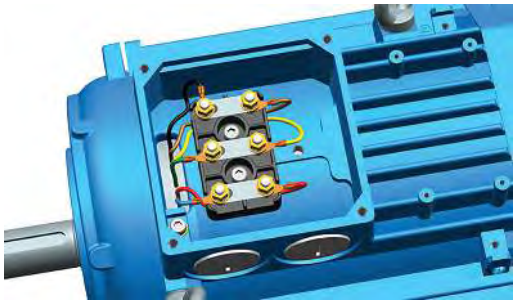

Terminal board for motor sizes 90 - 112, IE2, and 90 - 100, IE3.

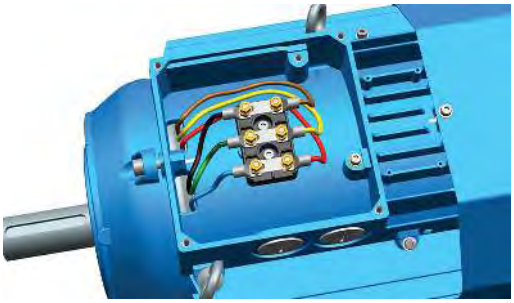

Terminal board for motor size 132, IE2, and motor sizes 112 - 132, IE3.

Motor sizes 160 - 250

Terminal box for motor sizes 160 - 250. Connection flanges with tapped cable entries.

Terminal board for motor sizes 160 - 250.

Motor sizes 280 - 315

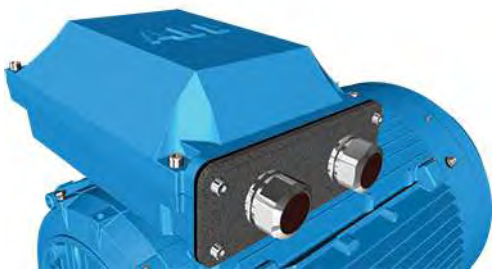

Terminal box for motor sizes 280 - 315, except LKC. Connection flange with tapped cable entries.

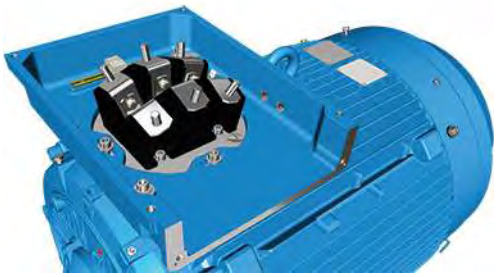

Terminal board for motor sizes 280 - 315, except LKC.

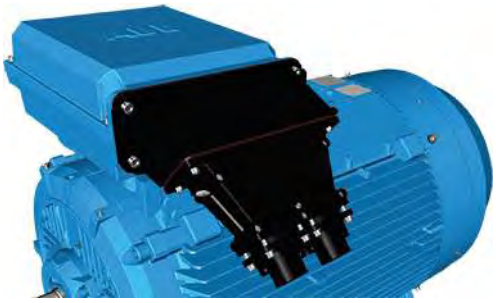

Terminal box for motor sizes 315 LKC and 355 - 400. Adapter and cable sealing end unit.

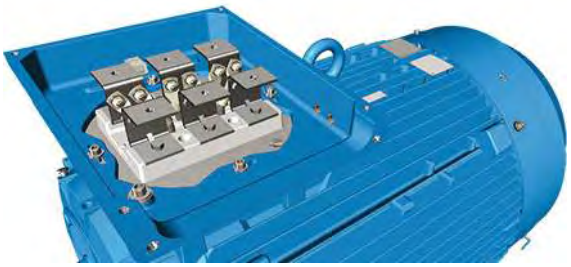

Terminal board for motor sizes 315 LKC and 355 - 400.

Motor size 450

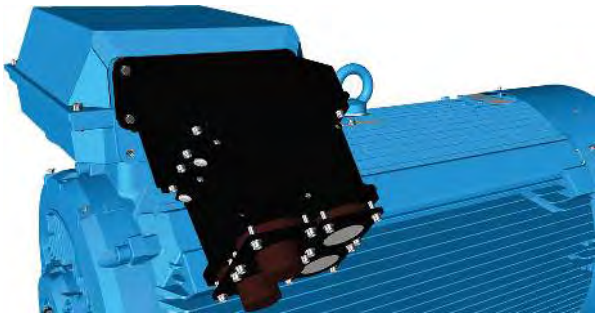

Terminal box for motor sizes 450, with adapter and cable sealing end unit.

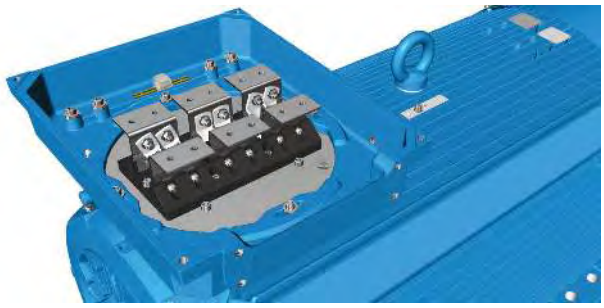

Terminal board for motor size 450.

Terminal box
Terminal box alternatives

Main terminal box

Adapters, Flange with glands; cable sealing end units

Optional adapters

There is a broad selection of cable termination accessories available to allow termination of one or several cables. The most common ones are explained below.

How to order?

- Check first that the teminal box itself allows mounting of the desired cable and cores (refer to motor type and terminal box type cross reference on previous page)
- If very large cables are used it might be necessary to use a larger terminal box than standard. Select the right cable gland(s) or cable sealing end unit(s) that match outer diamater of the cable(s)
- Select appropriate adapter or flange
- Note that turning the terminal box to a non-standard position might limit the use of some adapters.

Ordering example

Motor Cables	200 kW, 4 pole, 400 V 50 Hz 2 pieces, outer diameter 58 mm, single core cross section 185 mm², clamping device needed, cables coming from below
Needed one terminal box for anticondensation heaters and another for temperature detectors, material must be cast iron.	
Motor	M3BP 315 MLA 4-pole, B3
Adapter	D-D - variant code 293
Cable sealing end unit	Variant code 278
Clamping	Variant code 231
Auxiliaries	Variant codes 380, 567, 568

Main terminal box and maximum single core cross-section

You can select one size larger than standard terminal box if a larger single cross-section is needed. The standard sizes of the main terminal box are listed in the following table. The terminal box is named according to its current-carrying capacity, from 120 to 1200. Check also the capacity of the cable entry to make sure that the cables fit. A larger terminal box can be ordered with variant code 019.

Standard terminal box	Large terminal box	Size of opening, large box	Max single cross-section mm² /phase
120	210	B	1 x 70
210	370	C	2 x 240
370	750	D	2 x 300
750	1200	E	4 x 500
1200	-	-	-

Optional adapters

To allow easy termination of cables entering the terminal box from above or below, an angle adapter is recommended.These are available for motor sizes 280 and above and can also be used to allow the mounting of several cable sealing end units or gland plates. For exact suitability on a certain motor size, refer to the 'terminal box opening' column in section Standard terminal box.

Adapter		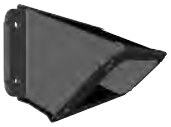		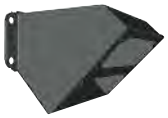	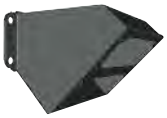	
Variant code	292	293	294	295	296	444
Suited for motor sizes	280	315, 355	315 LKC IE2, 355 SM_ 2-4 poles, 400 - 450	315 LKC IE2, 355 SM_ 2-4 poles, 400 - 450	315 LKC IE2, 355 SM_ 2-4 poles, 400 - 450	315 LKC IE2, 355 SM_ 2-4 poles, 400 - 450
Opening to terminal box	C	D	E	E	E	E
Flange or opening for end unit	C	D	D	2 x D	3 x D	2 x E
Material	Steel	Steel	Steel	Steel	Steel	Steel
Notes			Included in type 750 terminal box when 750 is the standard size.	Included in type 1200 terminal box when 1200 is the standard size.	Only possible on type 1200 terminal box	Only possible on type 1200 terminal box

Cable sealing end units

As an alternative to flanges and cable glands, cable sealing end units can be used. These allow more space for spreading the cores for easy termination.
Cable sealing end units have rubber-sealed entries for one of two main cables. In addition, there are two plugged M20 holes for auxiliary cables.

	Small	Medium	Large
End unit			
Variant code	277	278	279
Suited for motor sizes	280	315, 355, except 315 LKC IE2, 355 SM_ 2-4 poles	315, 355, except 315 LKC IE2, 355 SM_ 2-4 poles
Opening to terminal box	C	D	D
Cable outer diameter	1 - 2 cables, 48 - 60 mm	1 - 2 cables, 48 - 60 mm	1 - 2 cables, 60 - 80 mm
Cable entry for auxiliary cable	2 x M20 plugged holes	2 x M20 plugged holes	2 x M20 plugged holes
Additional optional variants	EMC cable gland (704); Standard gland with clamping device (231)	EMC cable gland (704); Standard gland with clamping device (231)	EMC cable gland (704); Standard gland with clamping device (231)

Auxiliary terminal box

You can equip motors from frame size 160 upward with one or several auxiliary terminal boxes for connection of auxiliaries like heaters or temperature detectors. The standard auxiliary terminal box material for motor sizes 280 - 450 is aluminum and for 160 - 250 cast iron. For 280 - 450, cast iron as box material is also available as an option.

Connection terminals are of spring-loaded type for quick and easy connection. These are suitable for up to 2.5 mm^2 wires. Auxiliary terminal boxes for 280 - 450 are equipped with an earthing terminal. The first auxiliary terminal box is located on the right-hand side at D-end as standard.

The standard cable entry size is M20 for the aluminum box and M16 for the cast iron box, and the number of entries depends on the terminal box type and the number of selected auxiliaries

Related variant codes	
380	Separate terminal box for temperature detectors,standard material
418	Separate terminal box for auxiliaries, standard material
567	Separate terminal box material: cast iron
568	Separate terminal box for heating elements, standard material
569	Separate terminal box for brake

Small auxiliary aluminum terminal box for motor sizes 280 - 450
(variant codes 418, 568, 380, 569)
The size of terminal box ordered with these codes depends on the number of accessories ordered.
80 x 125 mm, max 12 strips. Earthing size M4

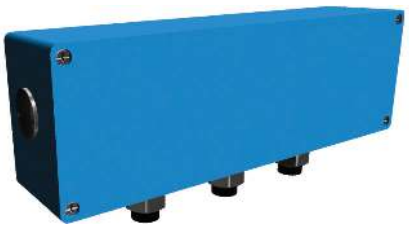

Large auxiliary aluminum terminal box for motor sizes 280 - 450.
The size of terminal box ordered with these codes depends on the number of accessories ordered.
80 x 250 mm, max 30 strips. Earthing size M4

Auxiliary cast iron terminal box
Frame size for motor sizes 160 - 250
(variant code 418):
119 x 170 mm, max. 18 strips. No earthing.

Frame size for motor sizes 280 - 450
(variant code 567):
211 x 188 mm, max 30 strips. Earthing size M6

Dimension drawings
Foot-mounted cast iron motors, 71 - 132

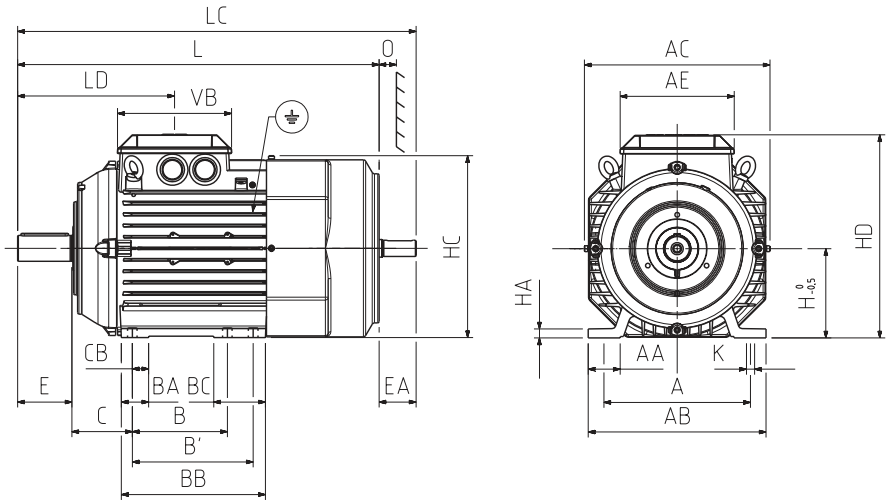

D-end

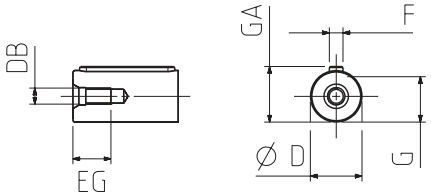

N-end

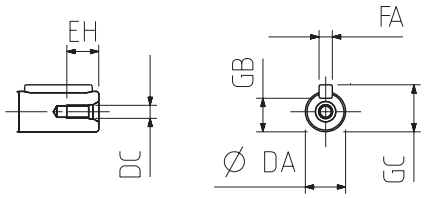

Mounting options IM B3 (IM 1001), IM 1002

Motor size	A	AA	AB	AC	AE	B	B'	BA	BB	BC	C	CB	D-Tol.	DA	DB	DC	E
71 M_	112	24	136	139	105	90	-	24	110	24	45	10	14-j6	11	M5	M4	30
71 ML_	112	24	136	139	105	90	-	24	110	24	45	10	14-j6	11	M5	M4	30
80 M_	125	28	154	157	105	100	-	28	124	28	50	12	19-j6	14	M6	M5	40
80 ML_	125	28	154	157	105	100	112	28	136	40	50	12	19-j6	14	M6	M5	40
90 SL_	140	30	170	177	118	100	125	28	150	54	56	12	24-j6	14	M8	M5	50
90 L_	140	30	170	177	118	100	125	28	150	54	56	12	24-j6	14	M8	M5	50
100 L_	160	38	200	197	118	140	-	34	172	34	63	16	28-j6	19	M10	M6	60
100 ML_	160	38	200	197	118	140	-	34	172	34	63	16	28-j6	19	M10	M6	60
100 LK_	160	38	200	197	118	140	160	34	192	54	63	16	28-j6	19	M10	M6	60
IE2 112	190	41	230	197	110	140	-	34	172	34	70	16	28-j6	19	M10	M6	60
IE3 112	190	41	230	239	168	140	-	34	170	34	70	14	28-j6	19	M10	M6	60
132	216	47	262	273	168	140	178	40	212	76	89	16	38-k6	24	M12	M8	80

Motor size	EA	EG	EH	F	FA	G	GA	GB	GC	H	HA	HC	HD	K	L	LD	O	VB
71 M_	23	12.5	10	5	4	11	16	8.5	12.5	71	9	139	178	7	264	112	20	105
71 ML_	23	12.5	30	5	4	11	16	8.5	12.5	71	9	139	178	7	294	112	20	105
80 M_	30	16	12.5	6	5	15.5	21.5	11	16	80	10	157	194	10	331	126	20	105
80 ML_	30	16	12.5	6	5	15.5	21.5	11	16	80	10	157	194	10	363	126	20	105
90 SL_	30	19	12.5	8	5	20	27	11	16	90	10	178	218	10	356	151	20	118
90 L_	30	19	12.5	8	5	20	27	11	16	90	10	178	218	10	390	151	20	118
100 L_	40	22	16	8	6	24	31	15.5	21.5	100	12	198	247	12	381	164	25	118
100 ML_	40	22	16	8	6	24	31	15.5	21.5	100	12	198	247	12	403	164	25	118
100 LK_	40	22	16	8	6	24	31	15.5	21.5	100	12	198	247	12	435	164	25	118
IE2 112	40	22	16	8	6	24	31	16	22	112	12	197	259	12	403	164	25	168
IE3 112	40	22	16	8	6	24	31	16	22	112	12	223	258	12	442	200	25	168
132	50	28	19	10	8	33	41	20	27	132	13	268	300	12	532	231	30	168

Tolerances	
A, B	± 0.8
D, DA	ISO j6
F, FA	ISO h9
H	+0 -0.5
N	ISO j6
C, CA	± 0.8

Dimension drawings
Flange- and foot & flange mounted cast iron motors, 71 – 132

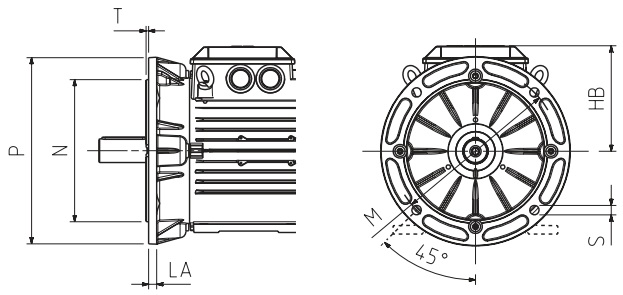

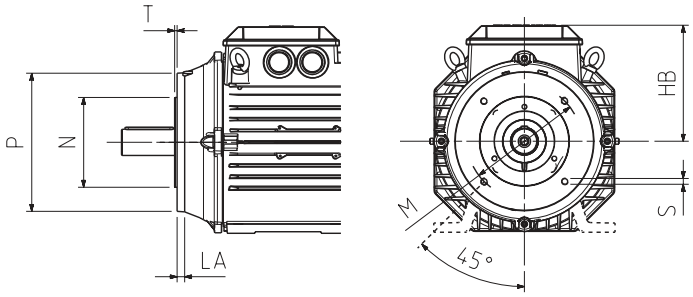

Mounting options IM B5 (IM 3001), IM 3002; IM B35 (IM 2001), IM 2002

Large flange

Motor size	HB	LA	M	N	P	S	T
71	108	9	130	110	160	10	3.5
80	114	10	165	130	200	12	3.5
90	128	10	165	130	200	12	3.5
100	147	11	215	180	250	15	4
IE2 112	148	11	215	180	250	15	4
IE3 112	146	11	215	180	250	15	4
132	168	12.5	265	230	300	15	4

Tolerances	
A, B	± 0.8
D, DA	ISO j6
F, FA	ISO h9
H	+0 -0.5
N	ISO j6
C, CA	± 0.8

Mounting options IM B14 (IM 3601), IM 3602; IM B34 (IM 2101), IM 2102

Small flange

Motor size	HB	LA	M	N	P	S	T
71	108	8	85	70	105	M6	2.5
80	114	8	100	80	120	M6	3
90	128	10	115	95	140	M8	3
100	147	10	130	110	160	M8	3,5
IE2 112	148	10	130	110	160	M8	3.5
IE3 112	146	14	130	110	160	M8	3.5
132	168	12	165	130	200	M10	3.5

Dimension drawings
Foot-mounted cast iron motors, 160 - 250

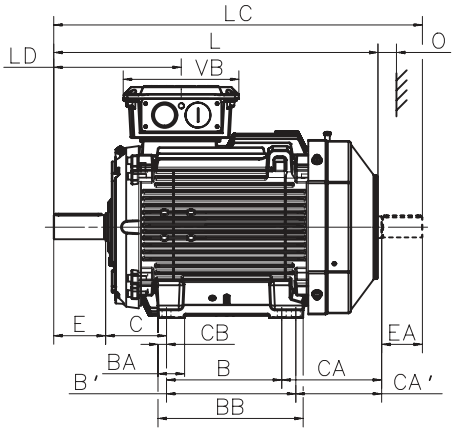

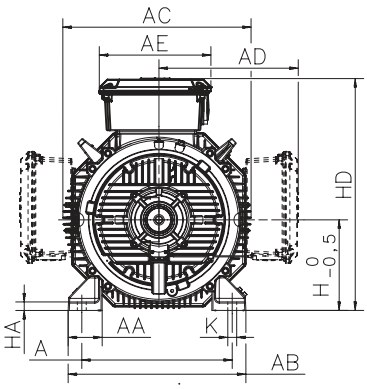

D-end

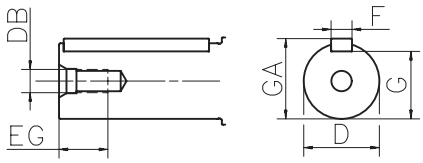

N-end

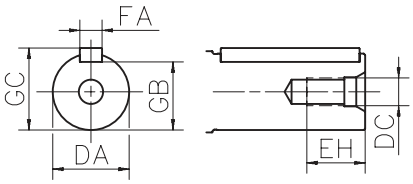

Mounting options IM B3 (IM 1001), IM B6 (IM 1051), IM B7 (IM 1061), IM B8 (IM 1071), IM V5 (IM 1011), IM V6 (IM 1031)

Motor size	Poles	A	AA	AB	AC	AD	AE	B	B'	BA	BB	C	CA	CA'	CB	D	DA	DB	DC	E
160 [1]	2-8	254	67	310	338	261	257	210	254	69	294	108	164	126	20	42	32	M16	M12	110
160 [2]	2-8	254	67	310	338	261	257	210	254	69	294	108	262	224	20	42	32	M16	M12	110
180	2-8	279	67	340	381	281	257	241	279	68	317	121	263	225	19	48	32	M16	M12	110
200	2-8	318	69	378	413	328	300	267	305	80	345	133	314	276	20	55	45	M20	M16	110
225	2	356	84	435	460	348	300	286	311	69	351	149	314	289	20	55	55	M20	M20	110
225	4-8	356	84	435	460	348	300	286	311	69	351	149	314	289	20	60	55	M20	M20	140
250	2	406	92	480	508	376	300	311	349	69	392	168	281	243	23	60	55	M20	M20	140
250	4-8	406	92	480	508	376	300	311	349	69	392	168	281	243	23	65	55	M20	M20	140

Motor size	Poles	EA	EG	EH	F	FA	G	GA	GB	GC	H	HA	HD	K	L	LC	LD	O	VB
160 [1]	2-8	80	36	28	12	10	37	45	27	35	160	23	421	14.5	584	671.5	287.5	45	257
160 [2]	2-8	80	36	28	12	10	37	45	27	35	160	23	421	14.5	681	768.5	287.5	45	257
180	2-8	80	36	28	14	10	42.5	51.5	27	35	180	23	461	14.5	726	815	300.5	50	257
200	2-8	110	42	36	16	14	49	59	39.5	48.5	200	23	528	18.5	821	934	320.5	70	311
225	2	110	42	42	16	16	49	59	49	59	225	23	573	18.5	849	971	313.5	80	311
225	4-8	110	42	42	18	16	53	64	49	59	225	23	573	18.5	879	1001	343.5	80	311
250	2	110	42	42	18	16	53	64	49	59	250	23	626	24.0	884	1010	343.5	90	311
250	4-8	110	42	42	18	16	58	69	49	59	250	23	626	24.0	884	1010	343.5	90	311

Tolerances	
A, B	ISO js14
C, CA	± 0.8
D, DA	ISO k6 < Ø 50 mm
	ISO m6 > Ø 50 mm
F, FA	ISO h9
H	+0 -0.5

Footnotes

M3BP IE2:
[1] MLA, MLB 2 and 8, MLC 2
[2] MLB 4-6, MLC 4-8, MLD, MLE

M3BP IE3:
[1] MLA 2 only
[2] All others

Dimension drawings
Flange- and foot & flange mounted cast iron motors, 160 - 250

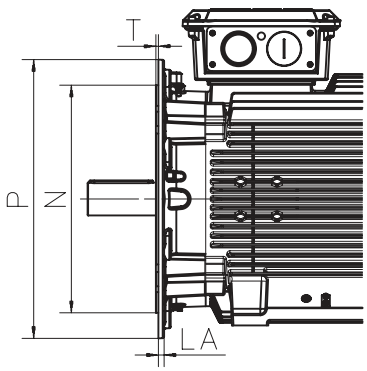

160 to 200

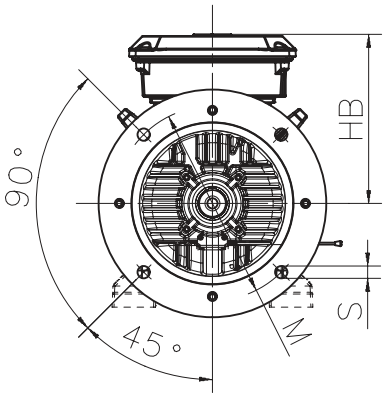

225 to 250

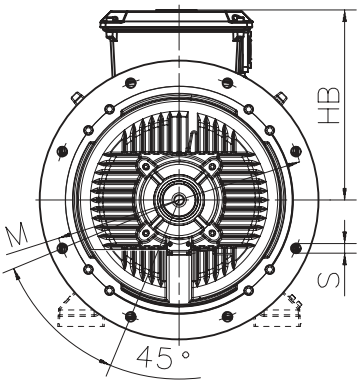

Mounting options IM B5 (IM 3001), V1 (IM 3011), V3 (IM 3031), IM B14 (IM 3601), V18 (IM 3611), V19 (IM 3631), IM B35 (IM 2001), IM V15 (IM 2011), IM V36 (IM 2031)

Motor size	Poles	HB	LA	M	N	P	S	T
160 [1]	2-8	261	20	300	250	350	19	5
160 [2]	2-8	261	20	300	250	350	19	5
180	2-8	281	15	300	250	350	19	5
200	2-8	328	20	350	300	400	19	5
225	2	348	20	400	350	450	19	5
225	4-8	325	20	400	350	450	19	5
250	2	376	24	500	450	550	19	5
250	4-8	376	24	500	450	550	19	5

Tolerances	
A, B	ISO js14
C, CA	± 0.8
D, DA	ISO k6 < Ø 50 mm
	ISO m6 > Ø 50 mm
F, FA	ISO h9
H	+0 -0.5
N	ISO j6

Footnotes

M3BP IE2:
[1] MLA, MLB 2 and 8, MLC 2
[2] MLB 4-6, MLC 4-8, MLD, MLE

M3BP IE3:
[1] MLA 2 only
[2] All others

Dimension drawings
Foot-mounted cast iron motors, 280 - 315

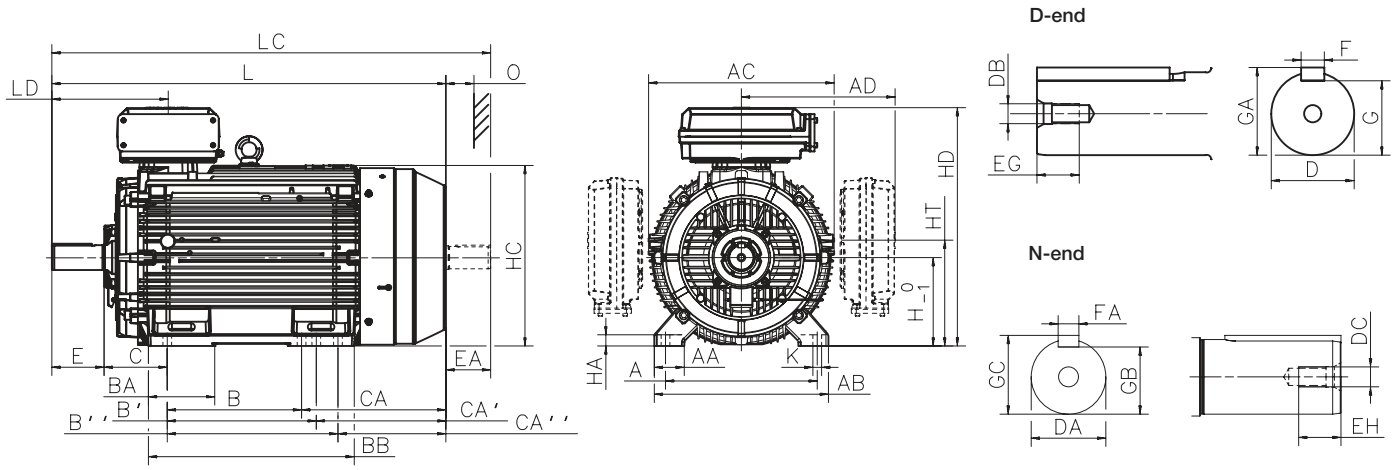

Mounting options IM B3 (IM 1001), IM B6 (IM 1051), IM B7 (IM 1061), IM B8 (IM 1071), IM V5 (IM 1011), IM V6 (IM 1031)

Motor size	Poles	A	AA	AB	AC	AD [1]	AD [2]	B	B'	B"	BA	BB	C	CA	CA'	CA"	D	DA	DB	DC	E
280 SM_	2	457	84	530	577	481	-	368	419	-	147	506	190	400	349	-	65	60	M20	M20	140
	4-12	457	84	530	577	481	-	368	419	-	147	506	190	400	349	-	75	65	M20	M20	140
280 ML_	2	457	84	530	577	-	504	419	457	-	193	608	190	400	349	-	65	60	M20	M20	140
	4-12	457	84	530	577	481	504	419	457	-	193	608	190	400	349	-	75	65	M20	M20	140
315 SM_	2	508	100	590	654	545	-	406	457	-	180	558	216	420	369	-	65	60	M20	M20	140
	4-12	508	100	590	654	545	-	406	457	-	180	558	216	420	369	-	80	75	M20	M20	170
315 ML_	2	508	100	590	654	545	-	457	508	-	212	669	216	480	429	-	65	60	M20	M20	140
	4-12	508	100	590	654	545	-	457	508	-	212	669	216	480	429	-	90	75	M24	M20	170
315 LK_	2	508	100	590	654	562	576	508	560	710	336	851	216	635	583	433	65	60	M20	M20	140
	4-12	508	100	590	654	562	576	508	560	710	336	851	216	635	583	433	90	75	M24	M20	170

Motor size	Poles	EA	EG	EH	F	FA	G	GA	GB	GC	H	HA	HC	HD [1] top-m.	HD [2] top-m.	HT	K	L	LC	LD top-m.	LD side-m.	O
280 SM_	2	140	40	40	18	18	58	69	53	64	280	31	564	762	-	337.5	24	1088	1238	336	539	100
	4-12	140	40	40	20	18	67.5	79.5	58	69	280	31	564	762	-	337.5	24	1088	1238	336	539	100
280 ML_	2	140	40	40	18	18	58	69	53	64	280	31	564	-	785	337.5	24	1189	1340	336	590	100
	4-12	140	40	40	20	18	67.5	79.5	58	69	280	31	564	762	785	337.5	24	1189	1340	336	590	100
315 SM_	2	140	40	40	18	18	58	69	53	64	315	40	638	852	-	375	28	1174	1322	356	585	115
	4-12	140	40	40	22	20	71	85	67.5	79.5	315	40	638	852	-	375	28	1204	1352	386	615	115
315 ML_	2	140	40	40	18	18	58	69	53	64	315	40	638	852	-	375	28	1285	1433	356	640	115
	4-12	140	48	40	25	20	81	95	67.5	79.5	315	40	638	852	-	375	28	1315	1463	386	670	115
315 LK_	2	140	40	40	18	18	58	69	53	64	315	40	638	852	880	359	28	1491	1639	356	721	115
	4-12	140	48	40	25	20	81	95	67.5	79.5	315	40	638	852	880	359	28	1521	1669	386	751	115

Tolerances	
A, B	± 0.8
C, CA	± 0.8
D	ISO k6 < Ø 50 mm
	ISO m6 > Ø 50 mm
F	ISO h9
H	+ 0 -0.5
N	ISO j6

Footnotes

[1] Terminal box 370
[2] Terminal box 750

Dimension drawings
Flange- and foot & flange mounted cast iron motors, 280 - 315

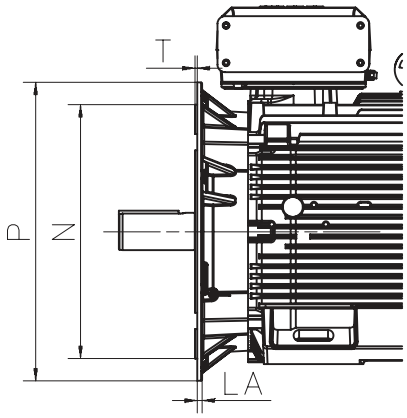

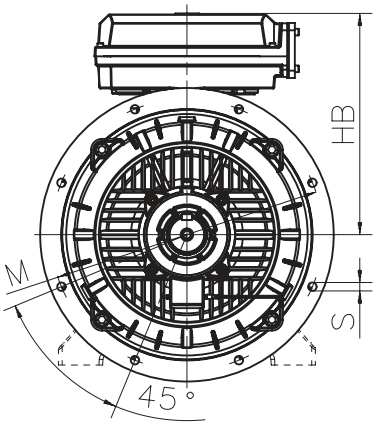

Mounting options IM B5 (IM 3001)V1, (IM 3011), V3 (IM 3031), IM B14 (IM 3601), V18 (IM 3611), V19 (IM 3631), IM B35 (IM 2001), IM V15 (IM 2011), IM V36 (IM 2031)

Motor size	Poles	HB [1]	HB [2]	LA	M	N	P	S	T
280 SM_	2	482	-	23	500	450	550	18	5
	4-12	482	-	23	500	450	550	18	5
280 ML_	2	-	505	23	500	450	550	18	5
	4-12	482	505	23	500	450	550	15	5
315 SM_	2	537	-	25	600	550	660	23	6
	4-12	537	-	25	600	550	660	23	6
315 ML_	2	537	-	25	600	550	660	23	6
	4-12	537	-	25	600	550	660	23	6
315 LK_	2	537	565	25	600	550	660	23	6
	4-12	537	565	25	600	550	660	23	6

Tolerances	
A, B	± 0.8
D	ISO j6
F	ISO h9
H	+0 - 0.1
N	ISO j6 (280 SM_)
	ISO js6 (315_)
C	± 0.8

Footnotes

[1] Terminal box 370
[2] Terminal box 750

Dimension drawings
Foot-mounted cast iron motors, 355 - 450

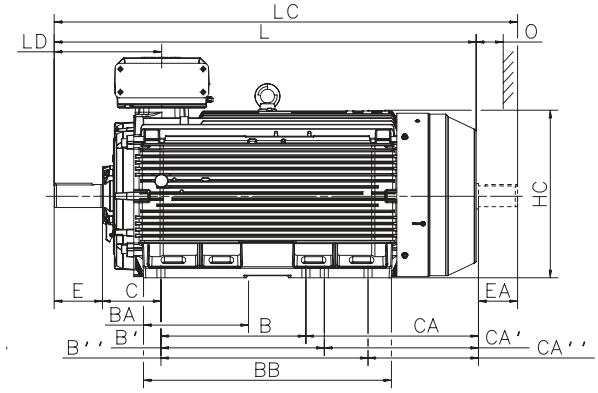

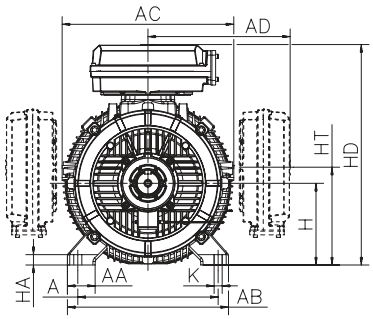

D-end

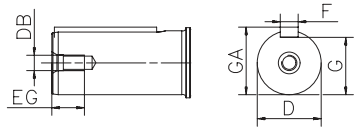

N-end

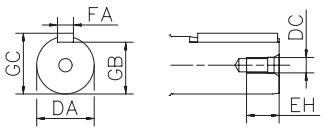

Mounting options IM B3 (IM 1001), IM B6 (IM 1051), IM B7 (IM 1061), IM B8 (IM 1071), IM V5 (IM 1011), IM V6 (IM 1031)

Motor size	Poles	A	AA	AB	AC	AD [1]	AD [2]	B	B'	B''	BA	BB	C	CA	CA'	CA''	D	DA	DB	DC	E	EA	EG	EH
355 SM_	2	610	120	700	746	604	618	500	560	-	221	722	254	525	465	-	70	70	M20	M20	140	140	42	40
	4-12	610	120	700	746	604	618	500	560	-	221	722	254	525	465	-	100	90	M24	M24	210	170	51	48
355 ML_	2	610	120	700	746	604	618	560	630	-	267	827	254	500	570	-	70	70	M20	M20	140	140	42	40
	4-12	610	120	700	746	604	618	560	630	-	267	827	254	500	570	-	100	90	M24	M24	210	170	51	48
355 LK_	2	610	120	700	746	604	618	630	710	900	447	1077	254	750	670	480	70	70	M20	M20	140	140	42	40
	4-12	610	120	700	746	604	618	630	710	900	447	1077	254	750	670	480	100	90	M24	M24	210	170	51	48
400 L_	2	710	150	840	834	-	660	900	1000	-	410	1156	224	567	467	-	80	70	M20	M20	170	140	42	40
	4-12	710	150	840	834	-	660	900	1000	-	410	1156	224	567	467	-	110	90	M24	M24	210	170	50	50
400 LK_ [5]	2	686	150	840	834	-	660	710	800	900	410	1156	280	701	611	511	80	70	M20	M20	170	140	42	40
	4-12	686	150	840	834	-	660	710	800	900	410	1156	280	701	611	511	100	90	M24	M24	210	170	50	50
450	2	800	160	950	966	-	-	1000	1120	1250	450	1420	250	-	-	-	80	-	M20	-	170	-	-	-
	4-12	800	160	950	966	-	-	1000	1120	1250	450	1420	250	737	617	487	120	100	M24	M24	210	210	50	50

Motor size	Poles	F	FA	G	GA	GB	GC	H	HA	HC	HD [1] top-	HD [2] top-	HD [3] top-	HD [4] side-m.	HT	K	L	LC	LD [1] top-	LD [2] top-	LD [3] top-	LD side-m.	O
355 SM_	2	20	20	62.5	74.5	62.5	74.5	355	45	725	944	958	-	843	425	35	1409	1559	397	397	-	679	130
	4-12	28	25	90	106	81	95	355	45	725	944	958	-	843	425	35	1479	1659	467	467	-	750	130
355 ML_	2	20	20	62.5	74.5	62.5	74.5	355	45	725	944	958	-	843	425	35	1514	1664	397	397	-	732	130
	4-12	28	25	90	106	81	95	355	45	725	944	958	-	843	425	35	1584	1764	467	467	-	802	130
355 LK_	2	20	20	62.5	74.5	62.5	74.5	355	45	725	944	958	-	843	425	35	1764	1914	397	397	-	857	130
	4-12	28	25	90	106	81	95	355	45	725	944	958	-	843	425	35	1834	2014	467	467	-	927	130
400 L_	2	22	20	71	85	67.5	79.5	400	45	814	-	1045	-	943	477	35	1851	2001	458	458	-	909	150
	4-12	28	25	100	116	81	95	400	45	814	-	1045	-	943	477	35	1891	2071	498	498	-	949	150
400 LK_ [5]	2	22	20	71	85	67.5	79.5	400	45	814	-	1045	-	943	477	35	1851	2001	458	458	-	909	150
	4-12	28	25	90	106	81	95	400	45	814	-	1045	-	943	477	35	1891	2071	498	498	-	949	150
450	2	22	-	71	85	-	-	450	46	933	-	1169	1293	-	-	42	2147	-	-	485	520	-	180
	4-12	32	28	109	127	100	116	450	46	933	-	1169	1293	-	-	42	2187	2407	-	525	560	-	180

Tolerances	
A, B	± 0.8
D, DA	ISO m6
F, FA	ISO h9
H	+0 -0.1
N	ISO j6
C, CA	± 0.8

Footnotes

[1] Terminal box 370
[2] Terminal box 750
[3] Terminal box 1200
[4] Lifting lugs included
[5] Same electrical values as with 400 L_, alternative dimensions.

Dimension drawings
Flange- and foot & flange mounted cast iron motors, 355 - 450

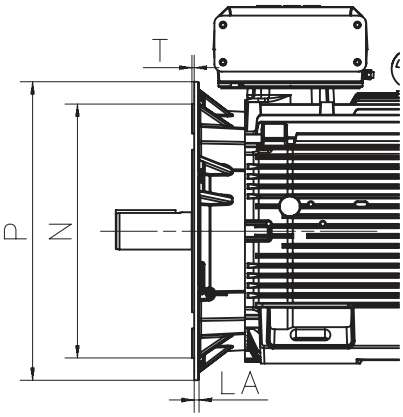

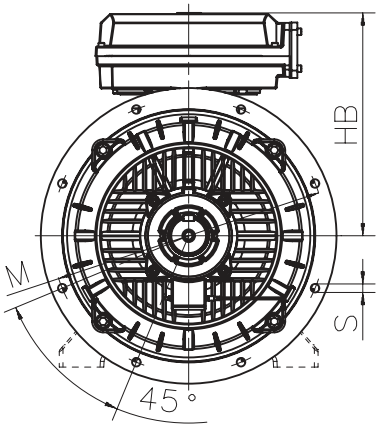

Bottom view

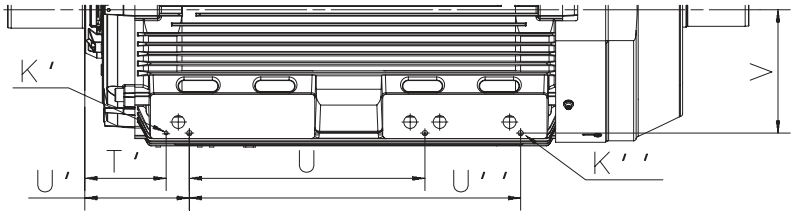

Mounting options IM B5 (IM 3001), V1 (IM 3011), V3 (IM 3031), IM B14 (IM 3601), V18 (IM 3611), V19 (IM 3631), IM B35 (IM 2001), IM V15 (IM 2011), IM V36 (IM 2031)

Flange

Motor size	Poles	HB [1]	HB [2]	HB [3]	LA	M	N	P	S	T
355 SM_	2	589	603	-	25	740	680	800	23	6
	4-12	589	603	-	25	740	680	800	23	6
355 ML_	2	589	603	-	25	740	680	800	23	6
	4-12	589	603	-	25	740	680	800	23	6
355 LK_	2	589	603	-	25	740	680	800	23	6
	4-12	589	603	-	25	740	680	800	23	6
400 L_	2	-	645	-	26	940	880	1000	28	6
	4-12	-	645	-	26	940	880	1000	28	6
400 LK_ [4]	2	-	645	-	26	740	680	800	24	6
	4-12	-	645	-	26	740	680	800	24	6
450	2	-	719	843	33	1080	1000	1150	28	6
	4-12	-	719	843	33	1080	1000	1150	28	6

Bottom

Motor size	Poles	K'	K"	T'	U	U'	U"	V
355 SM_	2	10	M16	120	280	560	-	670
	4-12	10	M16	120	282	560	-	670
355 ML_	2	10	M16	120	282	630	-	670
	4-12	10	M16	120	282	630	-	670
355 LK_	2	10	M16	120	282	630	890	670
	4-12	10	M16	120	282	630	890	670
400 L_	2	10	M16	248	287	887	-	802
	4-12	10	M16	248	287	887	-	802
400 LK_ [4]	2	10	M16	248	287	748	916	802
	4-12	10	M16	248	287	748	916	802
450	2	10	M16	274	290	861	-	912
	4-12	10	M16	274	323	841	-	912

Tolerances	
A, B	± 0.8
D, DA	ISO m6
F, FA	ISO h9
H	+0 -1.0
N	ISO js6
C, CA	± 0.8

Footnotes

[1] Terminal box 370
[2] Terminal box 750
[3] Terminal box 1200
[4] Same electrical values as with 400 L_, alternative dimensions.

Accessories
Built-in brake (variant code 412)

Brake design
Electromagnetic disc brakes are applied by the action of a set of springs and are released when voltage is applied to the brake coil.

This means that the motor will brake automatically in case of any voltage failure, as significant safety feature. The brake is always functional, irrespective of the mounting position of the brake motor.

Detailed view

1 Connection box, (with rectifier, optional)
2 Manual release (optional)
3 Modified N-end shield
4 V-ring seal
5 Adapter flange for brake
6 Brake
7 V-ring seal
8 Fan cover
9 Fan

Brake disc
The brake linings are made of asbestos-free material. The linings are highly resistant to wear and have excellent thermal conductivity, providing consistent performance also in high temperatures.

The brake disc withstands a large number of braking instances and is insensitive to dust and moisture.

Note that changing from a used to a new disc will result in a different braking torque.

Replacing the brake disc
The brake disc must be replaced when the minimum permissible lining thickness has been reached. For minimum lining thickness, refer to the brake manufacturer's catalog.

Rectifier
Rectifier is a devise for DC brake applications. It is highly resistant to temperature changes as well as to voltage peaks and has additional protection for the auxiliary contact of the contactor. Thanks to its compact design, it can be placed inside the motor's terminal box. Rectifier is an optional element.

Torque adjustment
Reducing the torque of the brake is possible with most brake types. Refer to the brake manufacturer's catalog or contact ABB for more information.

Manual release
Manual release bolts are provided as standard. A manual release handle is an optional element. Manual release overrides the action of brake springs as long as it is applied.

Though the manual release handle is optionally available for all motor sizes, it cannot be used in combination with the Pintsch Bamag brake type SFB.

Brake rating plates
The brake comes with two rating plates, one attached to the brake itself and another delivered loose, together with the motor. Variant code 412 is marked on the motor's rating plate (if it is listed among the five first codes on the motor order).

Available brake types

Motors can be fitted with recommended brakes from either Pintsch Bamag or Stromag, as seen in the tables below. Other brakes can be provided on request.

Brake type	Brake torque Nm	For motor size
KFB 10	100	160
KFB 16	160	160 - 180
KFB 25	250	180 - 225
KFB 40	400	200 - 250
KFB 63	630	225 - 280
KFB 1000	1000	280 - 315
KFB 1600	1600	315 - 355
On request		355 - 450

Pintsch & Bamag, type KFB, IP 67, 110 V DC Electromagnetic Double-Disc Spring-Applied Brake

Brake type	Brake torque Nm	For motor size
SFB 16	160	200 - 225
SFB 25	250	200 - 225
SFB 40	400	225 - 250
SFB 63	630	250
SFB 100	1000	280 - 315
SFB 160	1600	315 - 355
SFB 250	2500	355 - 400
SFB 400	4000	400
On request		450

Pintsch & Bamag,type SFB, IP 67, 110 V DC Electromagnetic Double-Disc Spring-Applied Brake

Brake type	Brake torque Nm	For motor size
NFF 10	100	160
NFF 16	160	160 - 180
NFF 25	250	180 - 225
NFF 40	400	200 - 250
NFF 63	630	225 - 250
For sizes 280-450 on request		

Stromag, type NFF, 110 V DC, IP66

Options for the brake

On new manufacture only

- Hand release (not possible for Pintsch Bamag brake type SFB)
- Rectifier
- Micro switch
- Proximity switch (not possible for Stromag brake)
- Standstill heater

On request

- Special brake voltage
- Raised brake torque
- Combination with brake, separate cooling fan and/or tacho
- For other variants, please contact ABB

Dimensions of brake motor

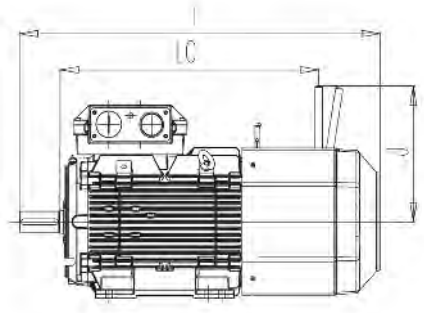

Foot-mounted: IM B3 (IM1001), IM B6 (IM 1051), IM B7 (IM1061),IM B8 (IM 1071), IM V5 (IM 1011), IM V6 (IM 1031)

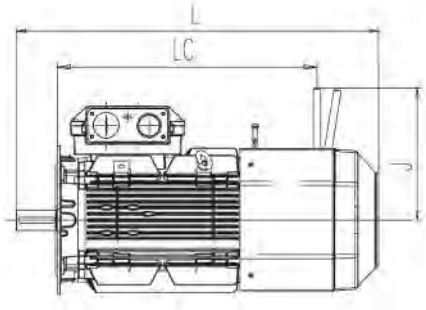

Flange-mounted: IM B5 (IM 3001), IM V1 (IM 3011), IM V3 (IM 3031), IM B14 (IM 3601), IM V18 (IM 3611), IM V19 (IM 3631)

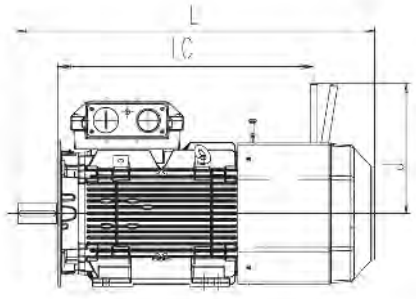

Foot- and flange-mounted: IM B35 (IM 2001), IM V15 (IM 2011),IM V36 (IM 2031)

		Foot-mounted			Flange-mounted			Foot- and flange-mounted		
Motor size	Poles	L	LC	J	L	LC	J	L	LC	J
160 [1]	2-8	773	511	372	773	511	372	773	511	372
160 [2]	2-8	871	608	372	871	608	372	871	608	372
180	2-8	935	687	372	935	687	372	935	687	372
200	2-8	1011	695	460	1011	695	460	1011	695	460
225	2	1085	729	460	1085	729	460	1085	729	460
225	4-8	1115	729	460	1105	729	460	1115	729	460
250	2-8	1119	755	460	1119	755	460	1119	755	460

[1]MLA-2, MLB-2, MLC-2, MLA-4, MLA-6, MLA-8 and MLB-8 -poles
[2]MLD-2, MLE-2, MLB-4, MLC-4, MLD-4, MLB-6, MLC-6 and MLC-8 -poles
Motor sizes 280 to 450 on request. Other dimensions same as Process performance cast iron motors sizes 180 to 250

Accessories
Separate cooling

Axial fan, N-end
Fan motors with an axial fan are available for motor sizes 71-450 and can be ordered can be ordered with variant code 183.

The values here are given for 400 V, but technical data for other voltages can be found in MotSize.

Axial fan, N-end, for motor sizes 71 - 132

Main motor	Fan motor type	Voltage range at 50 Hz, V	Voltage range at 60 Hz, V	Power W	Current A
M3BP 71	Wistro 132	380 - 500	380 - 575	29	0,06
		220 - 290	220 - 332	28	0,1
M3BP 80	Wistro 156	380 - 500	380 - 575	34	0,06
		220 - 290	220 - 332	34	0,1
M3BP 90	Wistro 169	380 - 500	380 - 575	75	0,19
		220 - 290	220 - 332	78	0,33
M3BP 100	Wistro 187	380 - 500	380 - 575	94	0,17
		220 - 290	220 - 332	87	0,31
M3BP 112	Wistro 210	380 - 500	380 - 575	99	0,17
		220 - 290	220 - 332	103	0,31
M3BP 132	Wistro 250	380 - 500	380 - 575	148	0,25
		220 - 290	220 - 332	146	0,45

Axial fan, N-end, for motor sizes 160 - 450

Main motor	Fan motor type (at 50 Hz)	Voltage V at 50 Hz	Power kW	Current A
M3BP 160 - 250	M2VA 63 B 4 B14	400	0.18	0,61
M3BP 280 - 315 ML	M3BP 80 MD 4 B14	400	0.75	1,83
M3BP 315 LK - 355 SM	M3BP 90 SLD 4 B14	400	1.5	3
M3BP 355 ML - 450 L	M3BP 100 LD 4 B14	400	3.0	6,3

Fan on top, N-end
The non-axial fan available for motor sizes 280 and above is a Ziehl-Abbegg fan with an integrated motor. This cooling option is suited for 400 V, 50 Hz networks and can be ordered with variant code 422.

MV at 50 Hzain motor	Fan motor type	Voltage V	Freq. Hz	Power kW	Current A
M3BP 280	Ziehl-Abegg RH35	400 VY	50	0.35	0.83
		460 VY	60	0.5	0.9
M3BP 315	Ziehl-Abegg RH40	400 VY	50	0.50	1.0
		460 VY	60	0.8	1.4
M3BP 355	Ziehl-Abegg RH45	400 VY	50	0.90	1.8
		460 VY	60	1.4	2.2
M3BP 400	Ziehl-Abegg RH50	400 VY	50	1.55	3.3
		460 VY	60	2.5	4.3
M3BP 450	Ziehl-Abegg RH56	400 VY	50	2.30	4.5
		460 VY	60	2.5	4.3

Special motor and fan on top, N-end
A special ABB fan motor type is available for motor sizes 280 and above. It is suited for environments where IP 65 is the required IP class or where the input voltage must be other than 360 – 420 V (50 Hz).

The values here are given for 400 V, but technical data for other voltages can be found in MotSize.

The centrifugal impeller used in the fan is a Ziehl-Abegg impeller. This type of cooling can be ordered with variant code 514.

Special motor and fan on top, N-end, for motor sizes 280 - 450

Main motor	Fan motor type	Voltage V at 50 Hz	Power kW	Current A
M3BP 280 - 315	M3BP 80 MD 4 B34	400	0.75	1.83
M3BP 355	M3BP 90 SLD 4 B34	400	1.5	3.0
M3BP 400	M3BP 100 LD 4 B34	400	3.0	6.3
M3BP 450	M3BP 112 MB 4 B34	400	4.0	8.2

Accessories
Silencer for motor sizes 280 - 450

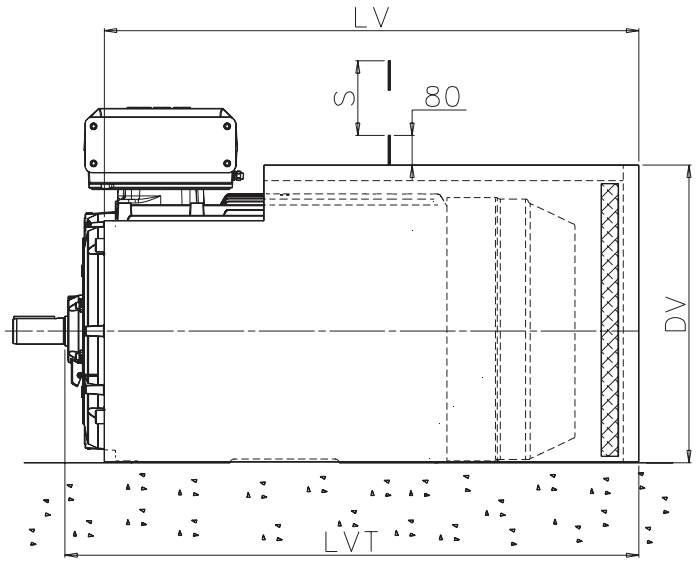

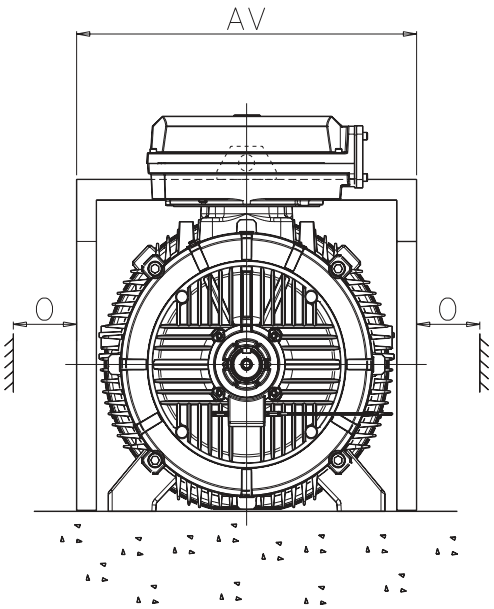

Both foot-mounted and flange-mounted motors can be fitted with a silencer to reduce noise level by about 5 - 6 dB(A). The silencer is painted blue and made of 2 mm steel sheet. The sound absorbing material is 40 mm thick polyurethane foam. On the rim there is a rubber strip for sealing on the floor. The silencer fits loosely over the motor.

The variant code for ordering a silencer is 055.

Motor size	AV	LV	LVT	DV	O[1]	S[2]	Weight kg
280 SM_	681	1010	1090	616	50	762	38
315 SM_	760	1094	1191	697	60	852	47
315 ML_	760	1205	1302	697	60	852	51
315 LK_	760	1411	1508	697	60	852	58
355 SM_	850	1335	1441	777	65	958	62
355 ML_	850	1440	1546	777	65	958	67
355 LK_	850	1690	1796	777	65	958	77
400 L_	938	1750	1873	866	75	1045	88
400 LK_	938	1750	1873	866	75	1045	88
450 L_	1050	2110	2230	990	80	1045	120

[1] Clearance for motor cooling.
[2] Clearance for removal of silencer.
Note: The dimensions are only valid for standard foot-mounted motors.

Accessories
Slide rails for motor sizes 160 - 250

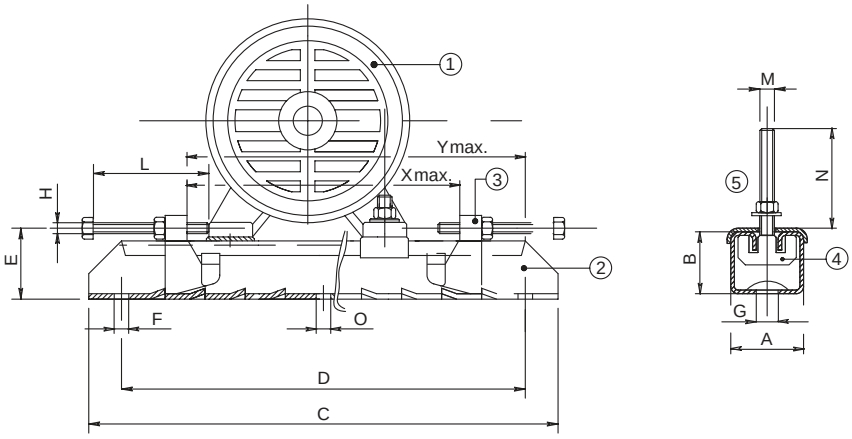

1 Motor | 2 Rail | 3 Movable adjusting bolt | 4 Fixing bolt, motor | 5 Plate

A set of slide rails includes two complete rails with screws for mounting the motor on the rails. Screws for mounting the rails on the foundation are not included.Slide rails have unmachined lower surfaces and should, before tightening down, be supported in a suitable manner.
Slide rails can be ordered with article numbers shown in the table.

		Article no.															Weight/
Motor size	Type	3GZV103001-	A	B	C	D	E	F	G	H	L	M	N	O	Xmax	Ymax	rail kg
Frame sizes 71 to 132 on request																	
160 - 180	TT180/12	-14	75	42	700	630	57	17	26	M12	120	M12	50	-	520	580	12.0
200 - 225	TT225/16	-15	82	50	864	800	68	17	27	M16	140	M16	65	17	670	740	20.4
250	TT280/20	-16	116	70	1072	1000	90	20	27	M18	150	M20	80	20	870	940	43.0

Accessories
Slide rails for motor sizes 280 - 400

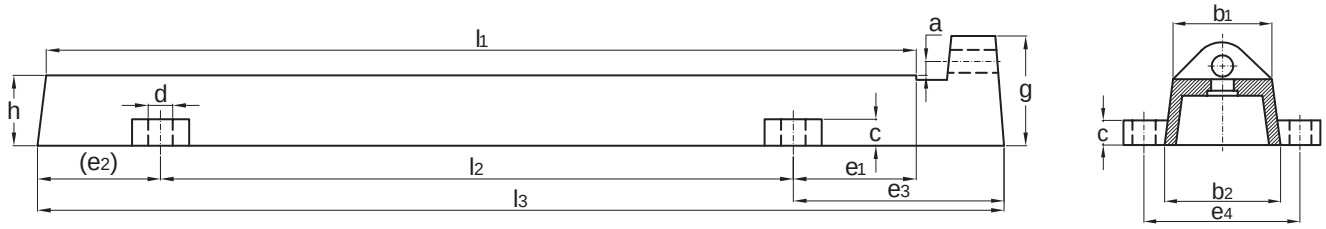

Slide rails for motor sizes 280 - 315.

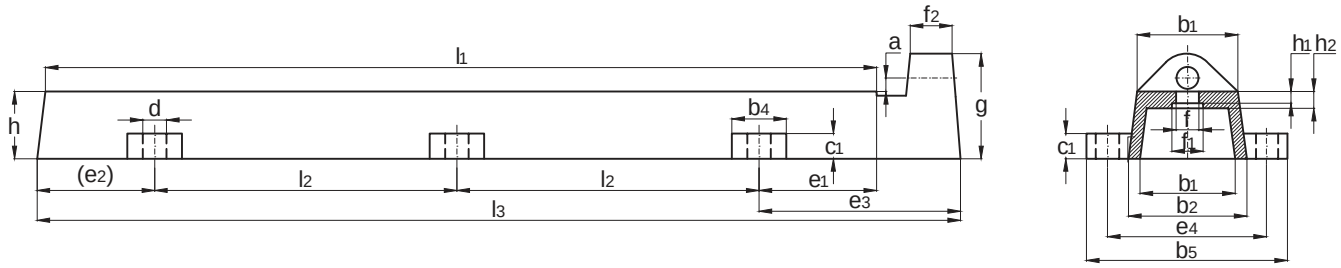

Slide rails for motor sizes 355 - 400.

Note: Slide rails that do not fulfill the DIN standard are available for motor size 450 on request.

A set of slide rails includes two complete rails with screws for mounting the motor on the rails. Screws for mounting the rails on the foundation are not included. Slide rails have unmachined lower surfaces and should be supported in a suitable manner before tightening down.
Slide rails can be ordered with article numbers shown in the table.

Motor															Bolts	Horizontal	Weight
size	Article no.	l1	l2	l3	a	h	b1	b2	c	d	e1	e2	e3	e4	to feet	bolts	kg/2 pc
280	3GZF334730-55	800	600	900	16	75	100	120	35	28	100	100	200	165	M20x90	M24x300	50
315	3GZF334730-56	1000	720	1100	16	80	120	140	40	28	140	140	240	190	M24x100	M24x300	80
355 - 400	3GZF334730-57	1250	485	1350	16	80	120	140	35	28	140	140	240	190	M24x100	M24x300	90

Motors in brief
IE2 cast iron motors, sizes 71 - 132

The following tables present the standard design of IE2 cast iron motors.

Motor size		71	80	90	100	112	132
Stator and end shields	Material	Cast iron					
	Paint color shade	Munsell blue 8B 4.5/3.25					
	Corrosion class	C3 (medium)					
Feet		Integrated cast iron feet					
Bearings	D-end	6203-2Z/C3	6204-2Z/C3	6205-2Z/C3	6206-2Z/C3	6206-2Z/C	6208-2Z/C3
	N-end	6202-2Z/C3	6203-2Z/C3	6204-2Z/C3	6205-2Z/C3	6205-2Z/C3 *)	6208-2Z/C3
Axially locked bearings		Locked at D-end					
Bearing seals	D-end	V-ring					
	N-end	Labyrinth seal in IE2, V-ring in IE3					
Lubrication		Permanently lubricated shielded bearings					
Measuring nipples for condition monitoring of the bearings		Not included					
Rating plate	Material	Stainless steel					
Terminal box	Frame and cover	Cast iron					
	Corrosion class	C3 (medium)					
	Cover screws	Zinc-electroplated steel					
Connections	Threaded openings	2xM16	2xM25	2xM32			
	Terminals	6 terminals for connection with cable lugs (not included)					
	Cable glands	Cable flange included, glands as option					
Fan	Material	Glass-fiber reinforced polypropylene					
Fan cover	Material	Steel					
	Paint color shade	Munsell blue 8B 4.5/3.25					
	Corrosion class	C3 (medium)					
Stator winding	Material	Copper					
	Insulation	Insulation class F. Temperature rise class B unless otherwise stated.					
	Winding protection	3 PTC thermistors, 150 °C					
Rotor winding	Material	Pressure die-cast aluminum					
Balancing method		Half-key balancing as standard					
Keyway		Closed keyway					
Drain holes		Drain holes with closable plastic plugs, open on delivery					
Enclosure		IP 55					
Cooling method		IC 411					

*) 6206-2Z/C3 in IE3

Motors in brief
IE2/IE3 cast iron motors, sizes 160 - 250

Motor size		160	180	200	225	250
Stator and end shields	Material	Cast iron				
	Paint color shade	Munsell blue 8B 4.5/3.25				
	Corrosion class	C3 (medium)				
Feet	Material	Integrated cast iron feet, bolted feet when terminal box on LHS/RHS				
Bearings	D-end	6309/C3	6310/C3	6312/C3	6313/C3	6315/C3
	N-end	6209/C3	6209/C3	6210/C3	6212/C3	6213/C3
Axially locked bearings		Locked at D-end				
Bearing seals	D-end	Gamma-ring				
	N-end	Gamma-ring				
Lubrication		Regreasable bearings, regreasing nipples M6x1				
Measuring nipples for condition monitoring of the bearings		Included				
Rating plate	Material	Stainless steel				
Terminal box	Frame and cover	Cast iron				
	Corrosion class	C3 (medium)				
	Cover screws	Zinc-electroplated steel				
Connections	Cable entries	2xM40, 2xM20		2xM63, 2xM20		
	Terminals	6 terminals for connection with cable lugs (not included)				
	Cable glands	Cable flange included, glands as option				
Fan	Material	Glass-fiber reinforced polypropylene				
Fan cover	Material	Steel				
	Paint color shade	Munsell blue 8B 4.5/3.25				
	Corrosion class	C3 (medium)				
Stator winding	Material	Copper				
	Insulation	Insulation class F. Temperature rise class B unless otherwise stated.				
	Winding protection	3 PTC thermistors, 150 °C				
Rotor winding	Material	Pressure die-cast aluminum				
Balancing method		Half-key balancing as standard				
Keyway		Closed keyway				
Drain holes		Drain holes with closable plastic plugs, open on delivery				
Enclosure		IP 55				
Cooling method		IC 411				

Motors in brief
IE2/IE3/IE4 cast iron motors, sizes 280 - 450

Motor size			280	315	355	400	450
Stator and end shields	Material		Cast iron				
	Paint color shade		Munsell blue 8B 4.5/3.25				
	Corrosion class		C3 (medium)				
Feet	Material		Integrated cast iron feet				
Bearings	D-end	2-pole	6316/C3	6316/C3	6316M/C3	6317M/C3	6317M/C3
		4-12-pole	6316/C3	6319/C3	6322/C3	6324/C3	6326M/C3
	N-end	2-pole	6316/C3	6316/C3	6316M/C3	6317M/C3	6317M/C3
		4-12-pole	6316/C3	6316/C3	6316/C3	6319/C3	6322/C3
Axially locked bearings			Locked at D-end				
Bearing seals	D-end		V-ring or labyrinth seal				
	N-end		V-ring or labyrinth seal				
Lubrication			Regreasable bearings, regreasing nipples M10x1				
Measuring nipples for condition monitoring of the bearings			Included				
Rating plate	Material		Stainless steel				
Terminal box	Frame and cover		Cast iron				Cover steel
	Corrosion class		C3 (medium)				Steel
	Cover screws		Zinc-electroplated steel				
Connections	Cable-entries	2-4-pole	2xM63+2xM20	2xM63, 2xØ48-60+2xM20	2xØ48-60, 60-80, 2xM20	2xØ60-80 (2-6-pole), 2xM2+0	2xØ60-80, 2xM20
		6-8-pole			2xØ32-49, 48-60, 2M20	2xØ48-60 (8-pole), 2xM20	
				See section Standard terminal box for detailed information.			
	Terminals		6 terminals for connection with cable lugs (not included)				
	Cable glands		Cable flange, glands as option				
Fan	Material		Glass-fiber reinforced polypropylene				
Fan cover	Material		Steel				
	Paint color shade		Munsell blue 8B 4.5/3.25				
	Corrosion class		C3 (medium)				
Stator winding	Material		Copper				
	Insulation		Insulation class F. Temperature rise class B unless otherwise stated.				
	Winding protection		3 PTC thermistors, 155 °C				
Rotor winding	Material		Pressure die-cast aluminum				
Balancing method			Half-key balancing				
Keyway			Open keyway				
Drain holes			Drain holes with closable plastic plugs, open on delivery				
Enclosure			IP 55				
Cooling method			IC 411				

Motor construction

Exploded view, frame size 315

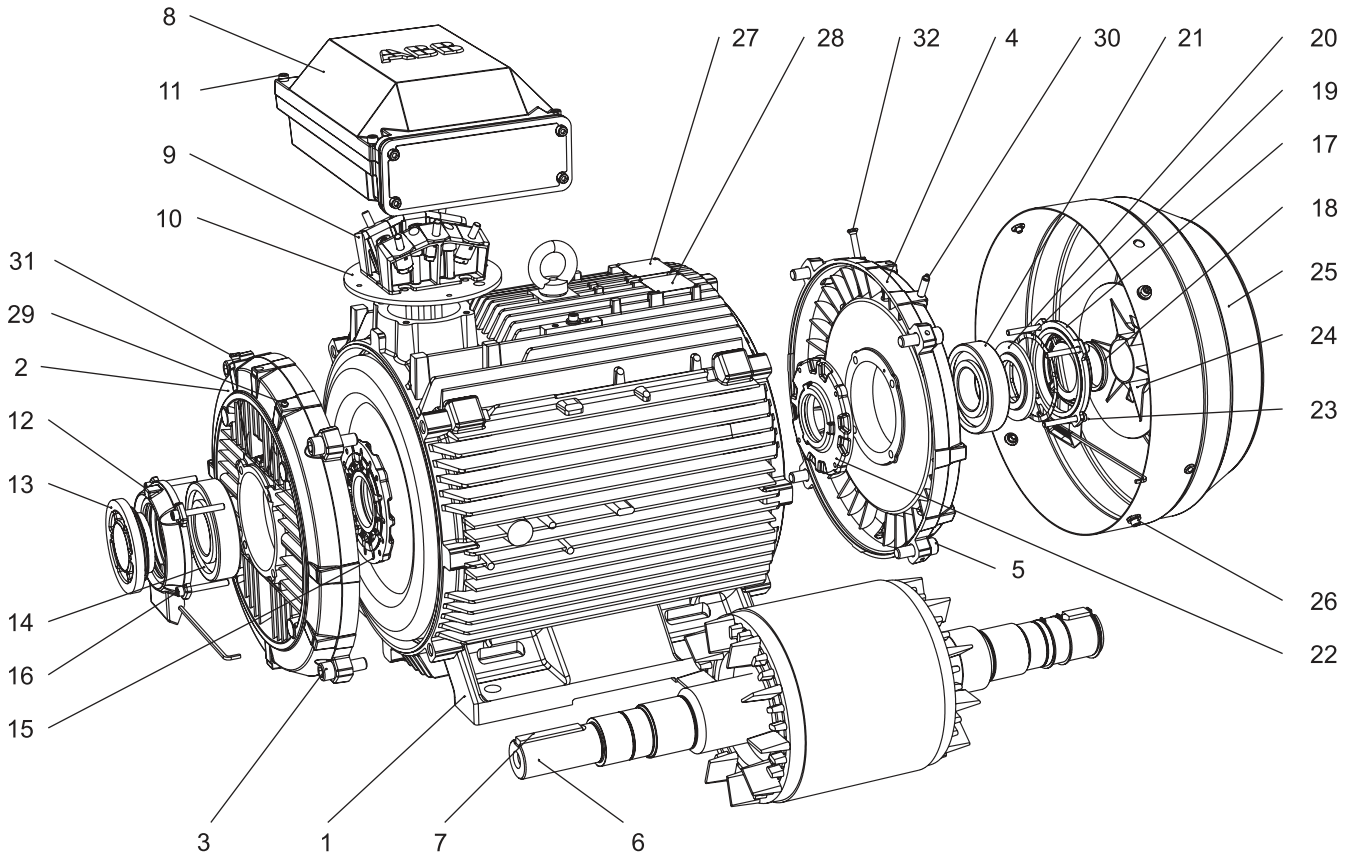

1 Stator frame
2 End shield, D-end
3 Screws for end shield, D-end
4 End shield, N-end
5 Screws for end shield, N-end
6 Rotor with shaft
7 Key, D-end
8 Terminal box
9 Terminal board
10 Intermediate flange
11 Screws for terminal box cover
12 Outer bearing cover, D-end
13 Valve disc with labyrinth seal, D-end; standard in 2-pole motors, V-ring in 4-8 pole motors
14 Bearing, D-end
15 Inner bearing cover, D-end
16 Screws for bearing cover
17 Outer bearing cover, N-end
18 Seal, N-end
19 Wave spring
20 Valve disc, N-end
21 Bearing, N-end
22 Inner bearing cover, N-end
23 Screws for bearing cover
24 Fan
25 Fan cover
26 Screws for fan cover
27 Rating plate
28 Lubrication plate
29 Grease nipple, D-end
30 Grease nipple, N-end
31 SPM nipple, D-end
32 SPM nipple, N-end

Low voltage Process performance aluminum motors
Sizes 63 to 280, 0.09 to 90 kW

Ordering information 84

Rating plates 85

Technical data IE2 86
3000 r/min motors . . . 86
1500 r/min motors . . . 88
1000 r/min motors . . . 90
750 r/min motors . . . 91

Technical data IE3 92
3000 and 1500 r/min motors . . . 92
1000 r/min motors . . . 95

Variant codes 97

Mechanical design 101
Motor frame and drain holes . . . 101
Bearings . . . 102
Terminal box . . . 110

Dimension drawings 112
Motor sizes 63 - 112 . . . 112
Motor sizes 71 - 132, special design with two-piece flanges . . . 116
Motor size 132 . . . 117
Motors sizes 160 - 180 . . . 119
Motor sizes 200 - 225 . . . 122
Motor sizes 200 - 225 . . . 123
Motor sizes 250 - 280 . . . 128
Motor sizes 250 - 280 . . . 129

Accessories 134
Slide rails . . . 134

Aluminum motors in brief 135
Motor sizes 63 - 132 . . . 135
Motor sizes 160 - 280 . . . 136

Ordering information

Explanation of the product code

Motor type	Motor size	Product code	Code for mounting arrangement, Voltage and frequency code, Generation code followed by variant codes
M3AA	112MB	3GAA 112 312	- ADE, 122, 003, etc.
		1 2 3 4 5 6 7	8 9 10 11 12 13 14...

When placing an order, specify motor type, size and product code according to the following example.

Example

Motor type	M3AA 112 MB
Pole number	4
Mounting arrangement (IM-code)	IM B3 (IM 1001)
Rated output	4 kW
Product code	3GAA 112312-ADE
Variant codes if needed	

Positions 1 to 4

3GAA: Totally enclosed motor with aluminum stator frame

Positions 5 and 6

IEC size

06:	63
07:	71
08:	80
09:	90
10:	100
11:	112
13:	132
16:	160
18:	180
20:	200
22:	225
25:	250
28:	280

Position 7

Pole pairs

1:	2 poles
2:	4 poles
3:	6 poles
4:	8 poles
5:	10 poles
6:	12 poles
7:	> 12 poles
8:	Two-speed motors
9:	Multi-speed motors

Positions 8 to 10

Running number

Position 11

- (dash)

Position 11

- (dash)

Position 12 (marked with black dot in data tables)

Mounting arrangement

A:	Foot-mounted motor
B:	Flange-mounted motor. Large flange with clearance holes.
C:	Flange-mounted motor. Small flange with tapped holes.
F:	Foot- and flange-mounted motor. Special flange.
H:	Foot- and flange-mounted motor. Large flange with clearance holes.
J:	Foot- and flange-mounted motor. Small flange with tapped holes.
N:	Flange-mounted (CI ring flange FF)
P:	Foot-and flange-mounted motor (CI ring flange FF)
V:	Flange-mounted motor. Special flange.

Position 13 (marked with black dot in data tables)

Voltage and frequency code

Single-speed motors

B:	380 VΔ 50 Hz
D:	400 VΔ, 415 VΔ, 690 VY 50 Hz
E:	500 VΔ 50 Hz
F:	500 VY 50 Hz
S:	230 VΔ, 400 VY, 415 VY 50 Hz
T:	660 VΔ 50 Hz
U:	690 VΔ 50 Hz
X:	Other rated voltage, connection or frequency, 690 V maximum

Two-speed motors

A:	220 V 50 Hz
B:	380 V 50 Hz
D:	400 V 50 Hz
E:	500 V 50 Hz
S:	230 V 50 Hz
X:	Other rated voltage, connection or frequency, 690 V maximum
Remark:	For voltage code X the variant code “209 Non-standard voltage or frequency (special winding)” must be ordered.

Position 14

Version

A, B, C...:	Generation code followed by variant codes

Efficiency values are given according to IEC 60034-2-1; 2014

For detailed dimension drawings please see our web-pages ‘www.abb.com/motors&generators’ or contact ABB.

Rating plates

The motor's main rating plate shows the motor's performance values with various connections at nominal speed. The rating plate also shows the efficiency level (IE2, IE3, or IE4), year of manufacture, and the lowest nominal efficiency at 100, 75, and 50 % nominal load. The material of the rating plate is aluminum as standard.

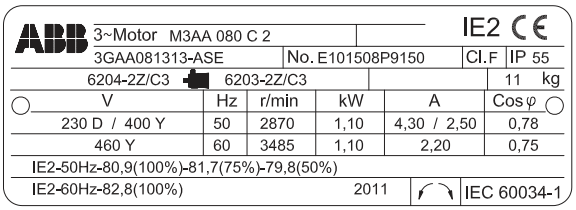

Motor sizes 71 to 80

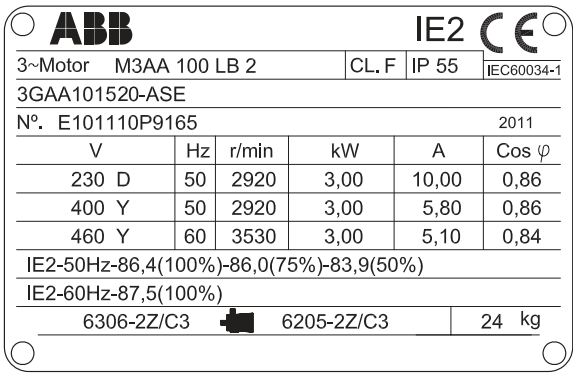

Motor sizes 90 to 132

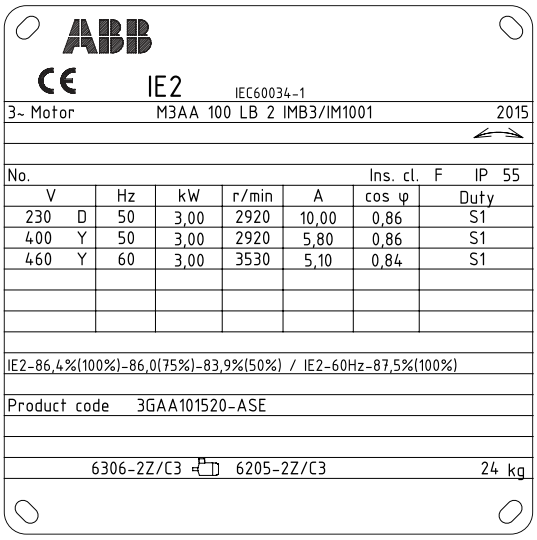

Motor size 100

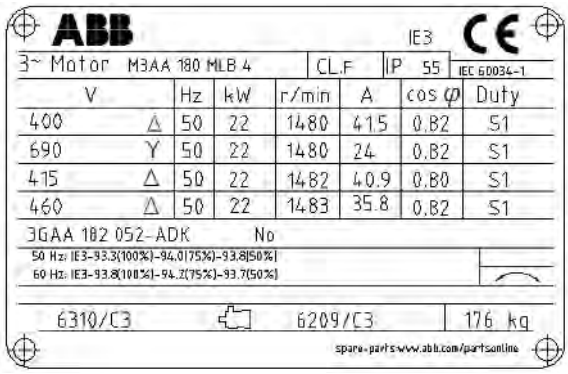

Motor sizes 160 to 180

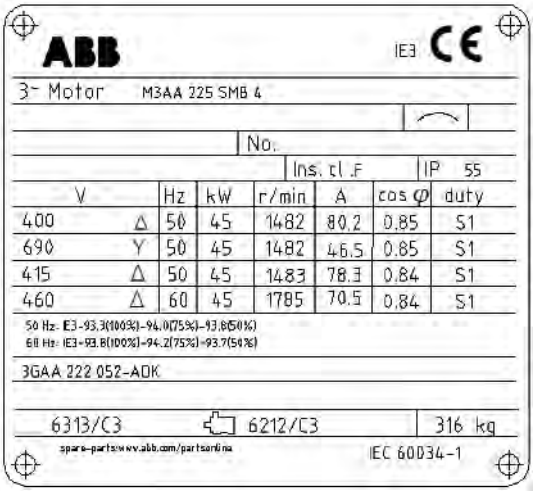

Motor sizes 200 to 280

Technical data
IE2 aluminum motors, 3000 r/min

IP 55 - IC 411 - Insulation class F, temperature rise class B
IE2 efficiency class according to IEC 60034-30-1; 2014

Output kW	Motor type	Product code	Speed r/min	Efficiency IEC 60034-30-1; 2014 Full load 100%	3/4 load 75%	1/2 load 50%	Power factor Cosφ	Current I_N A	I_s/I_N	Torque T_N Nm	T_l/T_N	T_b/T_N	Moment of inertia J = 1/4 GD²kgm²	Weight kg	Sound pressure Level L_{PA} dB
3000 r/min = 2 poles				400 V 50 Hz				CENELEC-design							
0.18	M3AA 63A 2	3GAA061311-••C	2820	75,0	72,0	66,1	0,62	0,55	4,2	0,6	3,5	3,1	0,000130	3,9	54
0.25	M3AA 63B 2	3GAA061312-••C	2810	78,6	77,0	69,6	0,69	0,66	4,5	0,84	3,6	3,3	0,000160	4,4	54
0.37	M3AA 71A 2	3GAA071311-••E	2800	73,8	75,8	73,9	0,76	1,0	4,9	1,3	2,7	2,7	0,000350	4,9	58
0.55	M3AA 71B 2	3GAA071312-••E	2790	78,4	79,8	78,7	0,78	1,3	5,3	1,9	2,9	2,8	0,000450	5,9	58
0.75	M3AA 80B 2	3GAA081312-••E	2895	80,6	80,4	77,3	0,79	1,7	8,1	2,4	3,7	3,9	0,00090	10,5	60
1.1	M3AA 80C 2	3GAA081313-••E	2875	80,6	80,4	77,9	0,80	2,4	7,8	3,6	3,6	3,5	0,00120	11,0	60
1.5	M3AA 90L 2	3GAA091500-••E	2900	84,1	85,0	83,5	0,9	2,9	7,6	4,9	2,5	3,3	0,00240	16	60
2.2	M3AA 90LB 2	3GAA091520-••E	2870	84,6	85,7	84,9	0,9	4,4	6,9	7,3	2,8	3,2	0,00270	18	63
3	M3AA 100LB 2	3GAA101520-••E	2920	86,4	86,1	84,0	0,9	5,8	9,3	9,8	3,3	3,9	0,0050	25	62
4	M3AA 112MB 2	3GAA111320-••E	2885	86,1	87,0	88,0	0,9	7,6	7,6	13,2	2,5	2,8	0,00620	30	68
5.5	M3AA 132SB 2	3GAA131120-••E	2915	88,0	88,1	86,9	0,8	11,0	7,9	18,0	2,6	3,6	0,0160	52	73
7.5	M3AA 132SC 2	3GAA131130-••E	2915	88,3	89,0	88,4	0,9	13,6	7,6	24,5	2,2	3,2	0,0220	52	73
11	M3AA 160MB 2	3GAA161320-••E	2900	90,3	90,5	89,4	0,9	20,2	8,5	36,2	2,7	3,7	0,0187	79	68
11	M3AA 160MLA 2	3GAA161031-••G	2938	90,6	91,5	91,1	0,90	19,2	7,5	35,7	2,4	3,1	0,044	91	69
15	M3AA 160MLB 2	3GAA161036-••G	2934	91,5	92,4	92,2	0,90	26,0	7,5	48,8	2,5	3,3	0,053	105	69
15	M3AA 160M 2	3GAA161300-••E	2905	90,4	90,8	90,0	0,8	28,5	9,1	49,3	3,3	4,0	0,020	83	69
18.5	M3AA 160LB 2	3GAA161520-••E	2895	91,1	92,0	92,1	0,9	32,9	9,7	61,0	3,2	4,3	0,0256	95	68
18.5	M3AA 160MLC 2	3GAA161037-••G	2932	92,0	93,1	93,1	0,92	31,5	7,5	60,2	2,9	3,4	0,063	123	69
22	M3AA 180MLA 2	3GAA181031-••G	2952	92,2	92,7	92,2	0,87	39,5	7,7	71,1	2,8	3,3	0,076	132	69
30	M3AA 200MLA 2	3GAA201035-••G	2956	93,1	93,5	92,8	0,90	51,6	7,7	96,9	2,7	3,1	0,178	210	72
30	M3AA 200MLA 2	3GAA201035-••G	2956	93,1	93,5	92,8	0,90	51,4	7,7	96,9	2,7	3,1	0,178	210	72
37	M3AA 200MLB 2	3GAA201036-••G	2959	93,4	93,7	92,9	0,90	63,5	8,2	119	3,0	3,3	0,196	225	72
45	M3AA 225SMA 2	3GAA221031-••G	2961	93,6	93,9	93,1	0,88	78,8	6,7	145	2,5	2,5	0,244	263	74
55	M3AA 250SMA 2	3GAA251031-••G	2967	94,1	94,4	93,8	0,88	95,8	6,8	177	2,2	2,7	0,507	304	75
75	M3AA 280SMA 2	3GAA281031-••G	2968	94,4	94,7	94,3	0,89	128	7,1	241	2,5	2,8	0,583	389	75
86 [1]	M3AA 280SMB 2	3GAA281032-••G	2973	94,8	95,1	94,5	0,89	146	8,3	276	2,8	3,3	0,644	425	75
90 [1]	M3AA 280SMB 2	3GAA281032-••G	2971	94,9	95,2	94,7	0,89	153	7,8	289	2,6	3,2	0,644	425	75

Output kW	Motor type	Product code	Speed r/min	Efficiency IEC 60034-30-1; 2014 Full load 100%	3/4 load 75%	1/2 load 50%	Power factor Cosφ	Current I_N A	I_s/I_N	Torque T_N Nm	T_l/T_N	T_b/T_N	Moment of inertia J = 1/4 GD²kgm²	Weight kg	Sound pressure Level L_{PA} dB
3000 r/min = 2 poles				400 V 50 Hz				High-output design							
0.75 [1]	M3AA 71C 2	3GAA071003-••E	2780	75,7	78,7	77,8	0,79	1,8	5,3	2,5	3,0	2,7	0,000560	6,5	58
1.5 [1]	M3AA 80C 2	3GAA081003-••E	2830	80,7	82,0	80,0	0,83	3,2	5,8	5,0	2,6	3,0	0,00110	11,0	60
5.5 [1]	M3AA 112MF 2	3GAA111360-••E	2870	86,4	88,2	88,0	0,9	10,5	7,9	18,3	3,1	3,5	0,00620	30	68
5.5 [1]	M3AA 112MF 2	3GAA111360-••E	2850	87,0	88,9	89,4	0,9	10,1	7,2	18,4	3,4	3,4	0,00620	30	68
9.2 [1]	M3AA 132SF 2	3GAA131160-••E	2885	88,1	90,2	90,7	0,9	16,5	6,9	30,4	2,0	2,7	0,0180	52	68
9.5 [1]	M3AA 132SG 2	3GAA131170-••E	2910	89,3	90,5	90,2	0,9	17,4	8,3	31,1	2,6	3,4	0,0180	52	68
11 [1]	M3AA 132SG 2	3GAA131170-••E	2895	88,7	90,7	91,1	0,9	20,1	7,2	36,2	2,2	2,9	0,0180	52	68
11	M3AA 132SMF 2	3GAA131260-••E	2900	90,3	90,5	89,4	0,9	20,2	8,5	36,2	2,7	3,7	0,0187	77	68
15	M3AA 132SMG 2	3GAA131270-••E	2905	90,4	90,8	90,0	0,8	28,5	9,1	49,3	3,3	4,0	0,020	81	69
18.5	M3AA 132SMJ 2	3GAA131290-••E	2895	91,1	92,0	92,1	0,9	32,9	9,7	61,0	3,2	4,3	0,0256	93	68
22	M3AA 160MLD 2	3GAA161034-••G	2933	91,7	92,8	92,8	0,90	38,0	8,1	71,6	3,2	3,6	0,063	123	69
27	M3AA 160MLE 2	3GAA161035-••G	2939	92,2	93,1	93,0	0,90	46,4	8,8	87,7	3,4	3,8	0,072	145	69
30	M3AA 180MLB 2	3GAA181032-••G	2950	92,7	93,5	93,3	0,88	53,0	7,9	97,1	2,8	3,3	0,092	149	69
45	M3AA 200MLC 2	3GAA201033-••G	2957	93,3	93,8	93,2	0,88	79,1	8,1	145	3,1	3,3	0,196	225	72
45	M3AA 200MLC 2	3GAA201033-••G	2957	93,3	93,8	93,2	0,90	78,2	8,1	145	3,1	3,3	0,196	225	72
55 [1]	M3AA 200MLD 2	3GAA201034-••G	2953	93,8	94,4	94,3	0,89	95,0	7,8	177	2,9	3,3	0,217	241	72
55	M3AA 225SMB 2	3GAA221032-••G	2961	93,9	94,3	93,6	0,88	96,0	6,5	177	2,4	2,5	0,274	286	74
70 [1]	M3AA 225SMC 2	3GAA221033-••G	2972	94,4	94,5	93,7	0,83	128	7,9	224	3,4	3,3	0,309	312	74
75 [1]	M3AA 225SMC 2	3GAA221033-••G	2969	94,4	94,6	94,0	0,84	136	7,4	241	3,2	3,1	0,309	312	74
75 [1]	M3AA 225SMD 2	3GAA221034-••G	2967	94,4	94,6	94,0	0,87	131	7,7	241	3,2	3,0	0,329	317	74
75	M3AA 250SMB 2	3GAA251032-••G	2970	94,5	94,8	94,4	0,89	128	7,6	241	2,8	3,1	0,583	351	75

[1] Temperature rise class F

Output kW		Motor type	Product code	Speed r/min	Efficiency IEC 60034-30-1; 2014 Full load 100%	3/4 load 75%	1/2 load 50%	Power factor Cosφ	Current I_N A	I_S/I_N	Torque T_N Nm	T_l/T_N	T_b/T_N	Moment of inertia J = 1/4 GD²kgm²	Weight kg	Sound pressure Level L_{PA} dB
3000 r/min = 2 poles					400 V 50 Hz				High-output design							
80	1)	M3AA 225SMD 2	3GAA221034-••G	2964	94,4	94,8	94,3	0,87	140	7,3	257	3,0	2,8	0,329	317	74
86	1)	M3AA 250SMC 2	3GAA251033-••G	2973	95,1	95,3	94,7	0,89	146	7,6	276	2,7	3,2	0,644	386	75
90	1)	M3AA 250SMC 2	3GAA251033-••G	2971	95,0	95,3	94,9	0,89	153	7,6	289	2,5	3,1	0,644	386	75

1) Temperature rise class F

Technical data
IE2 aluminum motors, 1500 r/min

IP 55 - IC 411 - Insulation class F, temperature rise class B
IE2 efficiency class according to IEC 60034-30-1; 2014

Output kW	Motor type	Product code	Speed r/min	Efficiency IEC 60034-30-1; 2014 Full load 100%	3/4 load 75%	1/2 load 50%	Power factor Cosφ	Current I_N A	I_s/I_N	Torque T_N Nm	T_l/T_N	T_b/T_N	Moment of inertia J = 1/4 GD²kgm²	Weight kg	Sound pressure Level L_{PA} dB
1500 r/min = 4 poles				400 V 50 Hz				CENELEC-design							
0.12	M3AA 63A 4	3GAA062311-••C	1400	65,5	60,4	51,7	0,57	0,46	3,1	0,81	2,7	2,8	0,000190	4,0	40
0.18	M3AA 63B 4	3GAA062312-••C	1380	67,3	63,9	56,7	0,62	0,62	3,1	1,24	2,5	2,6	0,000260	4,5	40
0.25	M3AA 71A 4	3GAA072311-••E	1365	65,1	66,0	62,7	0,76	0,7	4,0	1,7	2,0	2,1	0,000660	5,2	45
0.37	M3AA 71B 4	3GAA072312-••E	1375	69,7	71,9	71,1	0,79	1,0	3,8	2,5	2,0	2,2	0,00080	5,9	45
0.55	M3AA 80A 4	3GAA082311-••E	1375	72,8	76,1	75,2	0,77	1,4	4,5	3,8	1,8	2,2	0,00130	8,5	50
0.75	M3AA 80D 4	3GAA082314-••E	1415	79,8	81,3	79,9	0,82	1,7	5,9	5,0	2,6	3,2	0,00160	10,0	50
0.75	M3AA 80D 4	3GAA082444-••E	1420	82,5	81,5		0,75	1,7	5,0	5,0	2,4	2,9	0,00120	12,0	50
0.75	M3AA 80E 4	3GAA082315-••E	1425	79,8	80,4	77,9	0,72	1,9	6,6	5,0	3,5	3,6	0,0020	15,0	54
1.1	M3AA 90LB 4	3GAA092520-••E	1435	83,7	83,7	81,7	0,8	2,4	6,6	7,3	2,9	3,2	0,00430	16	50
1.5	M3AA 90LD 4	3GAA092540-••E	1435	84,2	84,1	81,9	0,8	3,3	7,0	9,9	3,1	3,5	0,00480	17	50
2.2	M3AA 100LC 4	3GAA102530-••E	1450	86,4	86,2	84,1	0,8	4,6	7,3	14,4	2,8	3,4	0,0090	25	54
3	M3AA 100LD 4	3GAA102540-••E	1445	85,7	86,1	85,1	0,8	6,3	7,0	19,8	2,4	3,0	0,0110	28	63
4	M3AA 112MB 4	3GAA112320-••E	1445	86,7	86,5	85,2	0,8	8,8	7,3	26,4	3,1	3,4	0,0126	34	64
5.5	M3AA 132M 4	3GAA132300-••E	1465	89,0	89,5	88,6	0,8	10,9	6,3	36,0	1,9	2,6	0,0380	48	66
7.5	M3AA 132MA 4	3GAA132310-••E	1460	89,1	89,8	89,4	0,8	14,7	6,4	49,0	1,8	2,6	0,0480	59	63
11	M3AA 160MLA 4	3GAA162031-••G	1466	90,4	91,6	91,3	0,84	20,9	6,8	71,6	2,2	2,8	0,081	99	62
11	M3AA 160MB 4	3GAA162320-••E	1460	90,4	90,8	89,9	0,8	21,5	7,7	71,9	2,1	3,1	0,0433	85	65
15	M3AA 160MLB 4	3GAA162032-••G	1470	91,4	92,3	92,2	0,83	28,5	7,1	97,4	2,6	3,0	0,099	118	62
15	M3AA 160LB 4	3GAA162520-••E	1455	90,6	91,0	90,3	0,8	29,8	7,1	98,4	2,4	2,9	0,0517	84	67
18.5	M3AA 180MLA 4	3GAA182031-••G	1477	91,9	92,8	92,6	0,84	34,5	7,2	119	2,6	2,9	0,166	146	62
22	M3AA 180MLB 4	3GAA182032-••G	1475	92,3	93,3	93,2	0,84	40,9	7,3	142	2,6	3,0	0,195	163	62
30	M3AA 200MLA 4	3GAA202031-••G	1480	93,2	94,0	93,7	0,84	55,2	7,4	193	2,8	3,0	0,309	218	63
37	M3AA 225SMA 4	3GAA222031-••G	1479	93,4	93,9	93,4	0,84	68,0	7,1	238	2,6	2,9	0,356	240	66
45	M3AA 225SMB 4	3GAA222032-••G	1480	93,9	94,3	93,9	0,85	81,3	7,5	290	2,8	3,2	0,44	273	66
55	M3AA 250SMA 4	3GAA252031-••G	1480	94,4	94,9	94,6	0,85	98,9	7,0	354	2,6	2,9	0,765	314	67
75	M3AA 280SMA 4	3GAA282031-••G	1478	94,3	94,9	94,6	0,85	135	7,1	484	2,8	3,0	0,866	389	67
85 [1]	M3AA 280SMB 4	3GAA282032-••G	1480	94,8	95,3	95,0	0,84	153	8,0	548	3,4	3,6	0,941	418	67
88 [1]	M3AA 280SMB 4	3GAA282032-••G	1479	94,7	95,3	95,1	0,84	159	7,9	568	3,3	3,5	0,941	418	67
90 [1]	M3AA 280SMB 4	3GAA282032-••G	1478	94,6	95,4	95,2	0,84	163	7,7	581	3,2	3,4	0,941	418	67

Output kW	Motor type	Product code	Speed r/min	Efficiency IEC 60034-30-1; 2014 Full load 100%	3/4 load 75%	1/2 load 50%	Power factor Cosφ	Current I_N A	I_s/I_N	Torque T_N Nm	T_l/T_N	T_b/T_N	Moment of inertia J = 1/4 GD²kgm²	Weight kg	Sound pressure Level L_{PA} dB
1500 r/min = 4 poles				400 V 50 Hz				High-output design							
0.55 [1]	M3AA 71C 4	3GAA072003-••E	1355	67,5	71,5	70,0	0,75	1,6	4,1	3,8	2,3	2,2	0,00110	6,5	45
0.95 [1]	M3AA 80C 4	3GAA082003-••E	1395	76,0	76,9	76,3	0,80	2,2	5,2	6,5	2,5	2,6	0,00230	10,5	50
1.1 [1]	M3AA 80C 4	3GAA082004-••E	1370	73,3	75,6	74,5	0,81	2,7	5,0	7,7	2,4	2,6	0,00230	10,5	50
2.2	M3AA 90LB 4	3GAA092560-••E	1390	80,0	83,1	83,1	0,8	4,7	5,3	15,1	2,3	2,6	0,00480	17	50
3.75	M3AA 100LC 4	3GAA102570-••E	1415	84,0	85,9	85,2	0,7	8,7	5,7	25,3	2,0	2,4	0,0090	25	60
4 [1]	M3AA 100LC 4	3GAA102570-••E	1415	83,2	85,8	85,5	0,8	9,1	5,5	26,9	2,1	2,5	0,0090	25	60
4.9 [1]	M3AA 112MF 4	3GAA112360-••E	1425	83,8	85,2	84,3	0,7	11,3	6,7	32,9	3,2	3,8	0,0126	34	64
5.5 [1]	M3AA 112MF 4	3GAA112360-••E	1410	82,5	84,0	83,4	0,8	11,8	6,2	37,3	2,9	3,4	0,0126	34	64
9.2	M3AA 132MF 4	3GAA132360-••E	1460	89,8	90,8	90,2	0,8	18,7	7,3	60,1	2,2	3,4	0,0480	59	59
9.5 [1]	M3AA 132ME 4	3GAA132350-••E	1450	89,1	90,5	90,4	0,8	19,4	6,4	62,5	2,0	3,3	0,0480	59	59
11 [1]	M3AA 132ME 4	3GAA132350-••E	1440	86,8	89,5	90,2	0,8	22,0	6,0	72,9	2,0	2,8	0,0480	59	59
11	M3AA 132SMF 4	3GAA132260-••E	1460	90,4	90,8	89,9	0,8	21,5	7,7	71,9	2,1	3,1	0,0433	83	65
15	M3AA 132SMH 4	3GAA132280-••E	1455	90,6	91,0	90,3	0,8	29,8	7,1	98,4	2,4	2,9	0,0517	82	67
18.5	M3AA 160MLC 4	3GAA162033-••G	1469	91,4	92,4	92,2	0,84	34,7	7,6	120	3,0	3,2	0,11	127	62
22 [1]	M3AA 160MLD 4	3GAA162034-••G	1463	91,6	93,0	93,2	0,85	40,7	6,9	143	2,5	2,9	0,125	140	62
30 [1]	M3AA 180MLC 4	3GAA182033-••G	1474	92,3	93,5	93,5	0,83	56,5	7,3	194	2,7	2,9	0,217	177	62
37	M3AA 200MLB 4	3GAA202032-••G	1479	93,4	94,4	94,4	0,85	67,2	7,1	238	2,6	2,9	0,343	234	63
45 [1]	M3AA 200MLC 4	3GAA202033-••G	1479	93,6	94,4	94,2	0,83	83,6	7,5	290	2,9	3,2	0,366	246	63
55	M3AA 225SMC 4	3GAA222033-••G	1478	94,0	94,6	94,4	0,85	99,3	7,4	355	2,9	3,1	0,474	287	66

[1] Temperature rise class F

Output kW		Motor type	Product code	Speed r/min	Efficiency IEC 60034-30-1; 2014 Full load 100%	3/4 load 75%	1/2 load 50%	Power factor Cosφ	Current I_N A	I_S/I_N	Torque T_N Nm	T_l/T_N	T_b/T_N	Moment of inertia J = 1/4 GD²kgm²	Weight kg	Sound pressure Level L_{PA} dB
1500 r/min = 4 poles					400 V 50 Hz				High-output design							
64		M3AA 225SMD 4	3GAA222034-••G	1480	94,2	94,6	94,1	0,85	115	8,2	412	3,3	3,3	0,542	314	66
67	1)	M3AA 225SMD 4	3GAA222034-••G	1478	93,6	94,4	94,4	0,84	122	7,7	432	3,0	3,0	0,542	314	66
68		M3AA 250SMB 4	3GAA252032-••G	1481	94,6	95,0	94,7	0,84	123	7,9	438	3,1	3,5	0,866	350	67
75	1)	M3AA 250SMB 4	3GAA252032-••G	1478	94,4	95,1	94,8	0,85	134	7,3	484	2,8	3,1	0,866	350	67
88	1)	M3AA 250SMC 4	3GAA252033-••G	1479	94,6	95,3	95,0	0,84	159	7,6	568	3,2	3,4	0,941	377	67
90	1)	M3AA 250SMC 4	3GAA252033-••G	1478	94,6	95,3	95,0	0,84	163	7,4	581	3,1	3,3	0,941	377	67

1) Temperature rise class F

Technical data
IE2 aluminum motors 1000 r/min

IP 55 - IC 411 - Insulation class F, temperature rise class B
IE2 efficiency class according to IEC 60034-30-1; 2014

Output kW		Motor type	Product code	Speed r/min	Efficiency IEC 60034-30-1; 2014 Full load 100%	3/4 load 75%	1/2 load 50%	Power factor Cosφ	Current I_N A	I_s/I_N	Torque T_N Nm	T_l/T_N	T_b/T_N	Moment of inertia J = 1/4 GD²kgm²	Weight kg	Sound pressure Level L_{PA} dB
1000 r/min = 6 poles					400 V 50 Hz				CENELEC-design							
0.09		M3AA 63A 6	3GAA063311-••C	910	47,1	42,5	32,1	0,56	0,49	2,1	0,94	2,1	2,1	0,00020	4,0	38
0.12		M3AA 63B 6	3GAA063312-••C	910	57,5	54,0	46,2	0,58	0,51	2,1	1,25	2,1	2,1	0,000270	4,5	38
0.18		M3AA 71A 6	3GAA073311-••E	885	59,5	61,1	56,5	0,71	0,6	3,1	1,9	1,7	1,9	0,000920	5,5	42
0.25		M3AA 71B 6	3GAA073312-••E	895	64,0	63,6	59,5	0,71	0,8	3,3	2,6	2,2	2,2	0,00120	6,5	42
0.37		M3AA 80A 6	3GAA083311-••E	905	68,0	70,7	68,3	0,73	1,1	3,6	3,9	1,6	2,1	0,0020	9,0	47
0.55		M3AA 80B 6	3GAA083312-••E	905	68,7	71,8	69,7	0,73	1,6	3,3	5,8	1,6	1,8	0,00260	10,0	47
0.75		M3AA 90LB 6	3GAA093520-••E	930	77,6	78,0	75,6	0,7	2,0	4,0	7,7	2,0	2,3	0,00480	18	44
1.1		M3AA 90LD 6	3GAA093540-••E	935	78,3	79,3	77,6	0,7	2,9	4,2	11,2	2,2	2,6	0,00560	20	44
1.5		M3AA 100LC 6	3GAA103530-••E	945	80,3	81,4	80,7	0,7	3,6	3,9	15,1	1,7	2,0	0,0090	26	49
2.2		M3AA 112MB 6	3GAA113320-••E	955	81,9	81,8	79,2	0,7	5,3	5,2	21,9	1,8	2,2	0,010	34	56
3		M3AA 132S 6	3GAA133100-••E	960	83,3	82,9	80,5	0,7	7,7	4,3	29,8	1,6	2,3	0,0310	46	57
4		M3AA 132MB 6	3GAA133320-••E	975	86,4	85,8	83,1	0,7	9,4	7,3	39,2	2,1	4,4	0,0450	54	57
4		M3AA 132MA 6	3GAA133310-••E	960	84,9	85,3	83,9	0,7	10,0	4,6	39,7	1,5	2,2	0,0380	46	61
5.5		M3AA 132MC 6	3GAA133330-••E	965	86,1	85,6	83,0	0,7	13,3	6,2	54,3	2,5	2,8	0,0490	59	61
7.5		M3AA 160MLA 6	3GAA163031-••G	975	88,5	89,9	89,7	0,79	15,4	7,4	73,4	1,7	3,2	0,087	98	59
11		M3AA 160MLB 6	3GAA163032-••G	972	89,3	90,6	90,5	0,79	22,5	7,5	108	1,9	2,9	0,114	125	59
15		M3AA 180MLA 6	3GAA183033-••G	977	90,5	91,5	91,0	0,77	31,0	5,8	146	1,8	2,7	0,168	148	59
18.5		M3AA 200MLA 6	3GAA203031-••G	988	91,6	92,2	91,7	0,80	36,4	6,7	178	2,3	2,9	0,382	196	63
22		M3AA 200MLB 6	3GAA203032-••G	987	92,0	92,9	92,7	0,82	42,0	6,6	212	2,2	2,8	0,448	218	63
30		M3AA 225SMA 6	3GAA223031-••G	986	92,6	93,3	92,8	0,83	56,2	7,0	290	2,6	2,9	0,663	266	63
37		M3AA 250SMA 6	3GAA253031-••G	989	93,1	93,8	93,4	0,82	69,9	6,8	357	2,4	2,7	1,13	294	63
45	1)	M3AA 280SMA 6	3GAA283031-••G	988	93,2	94,0	93,9	0,84	82,9	6,8	434	2,4	2,6	1,37	378	63
52	1)	M3AA 280SMB 6	3GAA283032-••G	989	93,3	94,1	93,9	0,83	96,9	7,5	502	2,8	3,0	1,5	404	63
55	1)	M3AA 280SMB 6	3GAA283032-••G	988	93,2	94,1	94,0	0,84	101	7,1	531	2,6	2,8	1,5	404	63

Output kW		Motor type	Product code	Speed r/min	Efficiency IEC 60034-30-1; 2014 Full load 100%	3/4 load 75%	1/2 load 50%	Power factor Cosφ	Current I_N A	I_s/I_N	Torque T_N Nm	T_l/T_N	T_b/T_N	Moment of inertia J = 1/4 GD²kgm²	Weight kg	Sound pressure Level L_{PA} dB
1000 r/min = 6 poles					400 V 50 Hz				High-output design							
0.37		M3AA 71C 6	3GAA073003-••E	895	63,6	64,1	59,3	0,66	1,3	3,7	3,9	2,4	2,6	0,00150	7,0	44
0.75	1)	M3AA 80C 6	3GAA083003-••E	905	69,8	70,0	68,8	0,76	2,0	3,9	7,9	2,5	2,4	0,00310	11,0	47
2.1	1)	M3AA 100LC 6	3GAA103570-••E	945	80,4	81,4	79,2	0,7	5,5	4,5	21,2	1,9	2,5	0,0090	26	49
2.2	1)	M3AA 100LC 6	3GAA103570-••E	940	79,8	81,5	79,6	0,7	5,7	4,3	22,3	1,9	2,4	0,0090	26	49
15		M3AA 160MLC 6	3GAA163033-••G	971	89,7	91,2	91,2	0,77	31,3	7,3	147	1,8	3,6	0,131	138	59
17.5	1)	M3AA 180MLB 6	3GAA183032-••G	974	89,3	90,7	90,4	0,74	38,2	5,4	171	1,7	2,6	0,213	175	59
18.5		M3AA 180MLB 6	3GAA183034-••G	975	90,7	92,0	92,0	0,79	37,2	5,8	181	1,7	2,7	0,198	162	59
18.5	1)	M3AA 180MLB 6	3GAA183032-••G	970	88,7	90,6	90,6	0,75	40,0	5,1	182	1,6	2,5	0,213	175	59
30	1)	M3AA 200MLC 6	3GAA203033-••G	985	92,0	93,1	92,8	0,83	56,7	6,9	290	2,3	2,8	0,531	245	63
37		M3AA 225SMB 6	3GAA223034-••G	985	93,1	94,0	94,0	0,83	69,1	6,6	358	2,3	2,6	0,821	300	63
42	1)	M3AA 225SMC 6	3GAA223033-••G	985	92,7	93,8	93,7	0,82	79,6	6,8	407	2,4	2,8	0,821	300	63
45		M3AA 250SMB 6	3GAA253032-••G	989	93,4	94,1	93,9	0,83	83,7	7,0	434	2,5	2,7	1,37	341	63
45	1)	M3AA 225SMC 6	3GAA223033-••G	984	92,6	93,9	94,0	0,83	84,4	6,4	436	2,3	2,6	0,821	300	63
52	1)	M3AA 250SMC 6	3GAA253033-••G	989	93,3	94,0	93,8	0,83	96,9	7,4	502	2,8	2,9	1,5	367	63
55	1)	M3AA 250SMC 6	3GAA253033-••G	988	93,2	94,1	94,0	0,84	101	7,1	531	2,6	2,8	1,5	367	63

[1] Temperature rise class F

Technical data
Aluminum motors, 750 r/min

IP 55 - IC 411 - Insulation class F, temperature rise class B
Efficiency class according to IEC 60034-30-1; 2014

Output kW	Motor type	Product code	Speed r/min	Efficiency IEC 60034-30-1; 2014 Full load 100%	3/4 load 75%	1/2 load 50%	Power factor Cosφ	Current I_N A	I_S/I_N	Torque T_N Nm	T_l/T_N	T_b/T_N	Moment of inertia J = 1/4 GD²kgm²	Weight kg	Sound pressure Level L_{PA} dB
750 r/min = 8 poles				400 V 50 Hz				CENELEC-design							
0.09	M3AA 71A 8	3GAA074001-••E	675	48,8	45,2	37,8	0,57	0,5	2,5	1,3	2,2	2,1	0,000920	5,5	40
0.12	M3AA 71B 8	3GAA074002-••E	665	51,5	49,0	41,9	0,60	0,6	2,5	1,7	2,2	2,1	0,00120	6,5	43
0.18	M3AA 80A 8	3GAA084001-••E	690	57,2	55,4	48,8	0,61	0,7	2,9	2,4	2,3	2,3	0,00180	8,5	45
0.25	M3AA 80B 8	3GAA084002-••E	690	61,4	60,0	54,0	0,60	1,0	3,1	3,4	2,5	2,5	0,00240	9,5	50
0.37	M3AA 90S 8	3GAA094100-••E	695	57,4	53,8	45,2	0,6	1,6	2,7	5,0	1,7	2,1	0,00320	13	52
0.55	M3AA 90L 8	3GAA094500-••E	660	61,7	59,5	53,0	0,6	2,3	2,5	7,6	1,5	1,6	0,00430	16	52
0.75	M3AA 100LA 8	3GAA104510-••E	720	70,7	67,1	59,9	0,5	3,2	3,9	9,9	2,5	3,3	0,00690	20	46
1.1	M3AA 100LB 8	3GAA104520-••E	695	76,0	74,9	70,9	0,7	3,1	3,4	15,1	1,7	2,2	0,00820	23	53
1.5	M3AA 112M 8	3GAA114300-••E	690	74,4	74,1	70,6	0,7	4,1	3,2	20,7	1,4	1,9	0,010	28	55
2.2	M3AA 132S 8	3GAA134100-••E	715	77,7	79,2	77,6	0,7	6,2	3,4	29,3	1,3	1,9	0,0310	46	56
3	M3AA 132M 8	3GAA134300-••E	715	79,3	78,8	75,5	0,6	8,5	3,2	40,0	1,2	1,8	0,0370	53	58
4	M3AA 160MLA 8	3GAA164031-••G	728	84,0	85,1	83,6	0,67	10,2	5,4	52,4	1,5	2,6	0,068	84	59
5.5	M3AA 160MLB 8	3GAA164032-••G	726	84,6	85,9	84,8	0,67	13,9	5,6	72,3	1,4	2,6	0,085	98	59
7.5	M3AA 160MLC 8	3GAA164033-••G	727	86,0	87,3	86,5	0,65	19,3	4,7	98,5	1,5	2,8	0,132	137	59
11	M3AA 180MLA 8	3GAA184031-••G	731	86,9	88,5	87,9	0,67	27,3	4,4	143	1,8	2,6	0,214	175	59
11	M3AA 180MLA 8	3GAA184033-••G	728	88,5	89,2	88,2	0,75	23,9	6,3	144	2,0	3,0	0,236	180	59
15	M3AA 200MLA 8	3GAA204031-••G	737	90,1	91,3	90,8	0,74	32,4	5,3	194	2,0	2,4	0,45	217	60
18.5	M3AA 225SMA 8	3GAA224031-••G	739	91,0	92,0	91,5	0,73	40,1	5,2	239	2,0	2,3	0,669	266	63
22	M3AA 225SMB 8	3GAA224032-••G	738	91,6	92,3	92,0	0,74	46,8	5,5	284	2,0	2,3	0,722	279	63
30	M3AA 250SMA 8	3GAA254031-••G	742	92,3	92,8	92,2	0,71	66,0	5,8	386	2,6	2,4	1,4	340	63
37	M3AA 280SMA 8	3GAA284031-••G	740	92,2	93,0	92,6	0,74	78,1	5,6	477	2,4	2,3	1,51	403	63

Output kW	Motor type	Product code	Speed r/min	Efficiency IEC 60034-30-1; 2014 Full load 100%	3/4 load 75%	1/2 load 50%	Power factor Cosφ	Current I_N A	I_S/I_N	Torque T_N Nm	T_l/T_N	T_b/T_N	Moment of inertia J = 1/4 GD²kgm²	Weight kg	Sound pressure Level L_{PA} dB
750 r/min = 8 poles				400 V 50 Hz				High-output design							
0.18	M3AA 71C 8	3GAA074003-••E	660	49,8	48,5	41,7	0,63	0,8	2,7	2,6	2,1	2,0	0,00150	7,0	40
0.37	M3AA 80C 8	3GAA084003-••E	685	63,1	63,2	58,1	0,62	1,4	3,3	5,1	2,3	2,3	0,00310	11,0	45
0.75 [1]	M3AA 90LF 8	3GAA094560-••E	635	58,5	60,7	56,2	0,6	3,0	2,7	11,2	1,7	2,0	0,00480	18	43
1.5 [1]	M3AA 100LG 8	3GAA104570-••E	685	70,7	70,9	67,3	0,6	4,7	3,1	20,9	1,9	2,0	0,0090	26	46
3.8 [1]	M3AA 132MF 8	3GAA134360-••E	710	76,7	79,3	78,1	0,7	10,5	3,7	51,1	1,4	2,5	0,0490	54	68
18.5	M3AA 200MLB 8	3GAA204032-••G	739	90,1	90,9	90,3	0,74	40,0	5,4	239	2,1	2,3	0,53	245	60
30	M3AA 225SMC 8	3GAA224033-••G	737	91,6	92,6	92,4	0,73	64,7	5,6	388	2,3	2,4	0,828	300	63
37	M3AA 250SMB 8	3GAA254032-••G	740	92,7	93,6	93,4	0,73	78,9	5,4	477	2,6	2,3	1,51	367	63
45 [1]	M3AA 250SMC 8	3GAA254033-••G	738	92,2	93,4	93,4	0,74	95,1	5,6	582	2,3	2,4	1,51	367	63

[1] Temperature rise class F

Technical data
IE3 aluminum motors, 3000 and 1500 r/min

IP 55 - IC 411 - Insulation class F, temperature rise class B
IE3 efficiency class according to IEC 60034-30-1; 2014

Output kW	Motor type	Product code	Speed r/min	Efficiency IEC 60034-30-1; 2014 Full load 100%	3/4 load 75%	1/2 load 50%	Power factor Cosφ	Current I_N A	I_S/I_N	Torque T_N Nm	T_l/T_N	T_b/T_N	Moment of inertia J = 1/4 GD²kgm²	Weight kg	Sound pressure Level L_{PA} dB
3000 r/min = 2 poles				400 V 50 Hz				CENELEC-design							
0.75	M3AA 80B 2	3GAA081320-••J	2885	80,7	80,9	80,2	0,76	1,7	7,5	2,5	4,1	4,6	0,0020	9,4	60
1.1	M3AA 80MC 2	3GAA081330-••J	2871	82,7	82,8	80,7	0,80	2,4	7,6	3,7	4,0	4,2	0,0020	11	60
1.5	M3AA 90L 2	3GAA091500-••J	2900	84,4	84,6	83,1	0,86	3,0	6,7	4,9	2,6	3,2	0,0020	16	60
2.2	M3AA 90LB 2	3GAA091520-••J	2903	85,9	86,3	84,9	0,79	4,7	7,4	7,2	3,2	3,8	0,0030	18	63
3	M3AA 100LB 2	3GAA101520-••J	2897	87,5	88,5	88,6	0,93	5,4	7,6	9,9	2,7	3,1	0,0090	31	62
4	M3AA 112MB 2	3GAA111320-••J	2873	88,5	89,7	89,9	0,92	7,2	8,5	13,2	3,2	3,9	0,0130	35	68
5.5	M3AA 132SB 2	3GAA131120-••J	2914	89,2	89,4	88,3	0,91	9,8	8,4	18,0	2,6	4,5	0,0210	56	73
7.5	M3AA 132SC 2	3GAA131130-••J	2898	90,5	91,0	90,6	0,91	13,0	8,1	24,7	2,8	3,9	0,0230	63	73
22	M3AA 180MLA 2	3GAA181051-••L	2944	92,7	93,5	93,4	0,90	38,0	8,4	71,4	3,2	3,7	0,071	133	74
30	M3AA 200MLA 2	3GAA201051-••L	2957	93,3	94,0	93,9	0,88	52,7	8,7	96,9	3,0	3,8	0,104	171	74
37	M3AA 200MLB 2	3GAA201052-••L	2952	93,7	94,5	94,5	0,88	64,7	8,7	120	3,1	3,7	0,115	185	74
45	M3AA 225SMA 2	3GAA221051-••L	2955	94,0	94,9	95,0	0,89	77,6	8,0	145	2,9	3,3	0,214	254	77
55	M3AA 250SMA 2	3GAA251051-••L	2966	94,3	94,6	94,1	0,88	95,6	7,4	177	2,9	2,9	0,274	302	79
75	M3AA 280SMA 2	3GAA281051-••L	2971	94,7	95,1	94,8	0,90	127	7,9	241	2,8	3,3	0,644	413	81
90	M3AA 280SMB 2	3GAA281052-••L	2968	95,0	95,4	95,0	0,90	151	8,4	290	2,7	3,4	0,644	421	81

Output kW	Motor type	Product code	Speed r/min	Efficiency IEC 60034-30-1; 2014 Full load 100%	3/4 load 75%	1/2 load 50%	Power factor Cosφ	Current I_N A	I_S/I_N	Torque T_N Nm	T_l/T_N	T_b/T_N	Moment of inertia J = 1/4 GD²kgm²	Weight kg	Sound pressure Level L_{PA} dB
1500 r/min = 4 poles				400 V 50 Hz				CENELEC-design							
0.75	M3AA 80ME 4	3GAA082350-••J	1437	82,5	82,8	81,0	0,73	1,9	5,9	5,0	3,5	3,8	0,0040	13	54
1.1	M3AA 90LB 4	3GAA092520-••J	1437	84,1	83,7	81,2	0,80	2,5	8,0	7,3	3,3	3,8	0,0070	17	50
1.5	M3AA 90LD 4	3GAA092540-••J	1445	85,3	85,0	82,7	0,75	3,3	7,6	10,0	3,4	4,1	0,0070	20	50
2.2	M3AA 100LC 4	3GAA102530-••J	1455	86,7	86,6	84,6	0,80	4,6	7,9	14,4	3,2	4,0	0,0110	25	54
3	M3AA 100LD 4	3GAA102540-••J	1445	87,9	88,4	87,8	0,83	5,9	7,7	19,8	2,8	3,5	0,0140	32	63
4	M3AA 112MB 4	3GAA112320-••J	1451	88,6	89,4	89,0	0,77	8,6	7,6	26,3	3,1	4,1	0,0180	34	64
5.5	M3AA 132M 4	3GAA132300-••J	1460	89,6	90,1	89,6	0,82	11,0	6,6	35,9	2,2	3,3	0,0310	48	66
7.5	M3AA 132MA 4	3GAA132310-••J	1462	90,6	91,1	90,5	0,79	15,6	6,7	48,9	2,5	3,4	0,0370	59	63
18.5	M3AA 180MLA 4	3GAA182051-••L	1473	92,6	93,3	93,1	0,82	35,1	8,3	120	3,1	3,5	0,124	137	67
30	M3AA 200MLA 4	3GAA202051-••L	1476	93,6	94,0	93,8	0,85	54,6	8,1	194	2,9	3,4	0,0	193	63
37	M3AA 225SMA 4	3GAA222051-••L	1480	93,9	94,8	94,8	0,82	69,3	7,5	239	2,8	2,9	0,362	249	68
55	M3AA 250SMA 4	3GAA252051-••L	1478	94,6	95,3	95,1	0,84	99,9	7,7	355	3,3	3,3	0,536	331	71
75	M3AA 280SMA 4	3GAA282051-••L	1482	95,0	95,5	95,3	0,82	138	7,9	483	3,6	3,8	0,941	410	73

Technical data
IE3 aluminum motors, 3000 r/min

IP 55 - IC 411 - Insulation class F, temperature rise class B
IE3 efficiency class according to IEC 60034-30-1; 2014

Output kW	Motor type	Product code	Speed r/min	Efficiency IEC 60034-30-1; 2014 Full load 100%	3/4 load 75%	1/2 load 50%	Power factor Cosφ	Current I_N A	I_S/I_N	Torque T_N Nm	T_l/T_N	T_b/T_N	Moment of inertia J = 1/4 GD²kgm²	Weight kg	Sound pressure Level L_{PA} dB
3000 r/min = 2 poles				400 V 50 Hz				CENELEC-design							
11	M3AA 160MLA 2	3GAA161051-••K	2943	92,1	92,7	92,4	0,92	18,7	8,1	35,6	2,7	3,4	0,0520	106	69
15	M3AA 160MLB 2	3GAA161052-••K	2943	92,5	93,4	93,2	0,92	25,4	8,4	48,6	3,1	3,4	0,0620	123	69
18.5	M3AA 160MLC 2	3GAA161053-••K	2942	93,1	93,9	93,9	0,93	30,8	8,3	60,0	3,1	3,6	0,0720	137	69
22	M3AA 180MLA 2	3GAA181051-••K	2957	93,2	93,9	93,8	0,91	37,4	8,1	71,0	2,6	3,2	0,116	176	69
30	M3AA 200MLA 2	3GAA201051-••K	2958	94,2	94,9	94,7	0,90	51,0	7,8	96,8	2,8	3,1	0,196	225	72
37	M3AA 200MLB 2	3GAA201052-••K	2960	94,7	95,2	95,0	0,91	61,9	8,8	119	3,1	3,4	0,217	241	72
45	M3AA 225SMA 2	3GAA221051-••K	2972	94,9	95,1	94,7	0,89	76,8	7,8	144	3,1	3,0	0,323	326	74
55	M3AA 250SMA 2	3GAA251051-••K	2975	95,2	95,4	95,0	0,89	93,6	8,0	176	2,8	3,3	0,579	351	75

Output kW	Motor type	Product code	Speed r/min	Efficiency IEC 60034-30-1; 2014 Full load 100%	3/4 load 75%	1/2 load 50%	Power factor Cosφ	Current I_N A	I_S/I_N	Torque T_N Nm	T_l/T_N	T_b/T_N	Moment of inertia J = 1/4 GD²kgm²	Weight kg	Sound pressure Level L_{PA} dB
3000 r/min = 2 poles				400 V 50 Hz				High-output design							
22	M3AA 160MLD 2	3GAA161054-••K	2944	92,7	93,5	93,4	0,90	38,0	8,4	71,4	3,2	3,7	0,0710	131	74
30	M3AA 180MLB 2	3GAA181052-••K	2957	93,3	94,0	93,9	0,88	52,7	8,7	96,9	3,0	3,8	0,104	162	74
37	M3AA 180MLC 2	3GAA181053-••K	2952	93,7	94,5	94,5	0,88	64,7	8,7	120	3,1	3,7	0,115	176	74
45	M3AA 200MLC 2	3GAA201053-••K	2955	94,0	94,9	95,0	0,89	77,6	8,0	145	2,9	3,3	0,214	250	77
55	M3AA 225SMB 2	3GAA221052-••K	2966	94,3	94,6	94,1	0,88	95,6	7,4	177	2,9	2,9	0,274	288	79
75	M3AA 225SMC 2	3GAA221053-••K	2966	94,7	95,1	94,7	0,88	129,0	8,1	241	3,3	3,0	0,329	328	79
75	M3AA 250SMB 2	3GAA251052-••K	2971	94,7	95,1	94,8	0,90	127,0	7,9	241	2,8	3,3	0,644	405	81
90	M3AA 250SMC 2	3GAA251053-••K	2968	95,0	95,4	95,0	0,90	151,0	8,4	290	2,7	3,4	0,644	414	81

Note! For missing motor types on generation K list please refer to previous page (L generation data)

Technical data
IE3 aluminum motors, 1500 r/min

IP 55 - IC 411 - Insulation class F, temperature rise class B
IE3 efficiency class according to IEC 60034-30-1; 2014

Output kW	Motor type	Product code	Speed r/min	Efficiency IEC 60034-30-1; 2014 Full load 100%	3/4 load 75%	1/2 load 50%	Power factor Cosφ	Current I_N A	I_S/I_N	Torque T_N Nm	T_l/T_N	T_b/T_N	Moment of inertia J = 1/4 GD²kgm²	Weight kg	Sound pressure Level L_{PA} dB
1500 r/min = 4 poles				400 V 50 Hz				CENELEC-design							
11	M3AA 160MLA 4	3GAA162051-••K	1473	92,2	93,0	92,7	0,84	20,4	7,7	71,3	2,6	2,9	0,108	126	62
15	M3AA 160MLB 4	3GAA162052-••K	1474	92,6	93,4	93,2	0,84	27,8	7,9	97,1	2,8	3,3	0,125	140	62
18.5	M3AA 180MLA 4	3GAA182051-••K	1481	93,3	94,0	93,8	0,82	34,9	7,6	119	3,0	3,1	0,217	177	62
22	M3AA 180MLB 4	3GAA182052-••K	1480	93,3	94,1	94,1	0,82	41,5	8,2	141	2,8	3,1	0,217	176	62
30	M3AA 200MLA 4	3GAA202051-••K	1484	94,4	94,8	94,6	0,84	54,6	8,3	193	3,0	3,3	0,366	246	63
37	M3AA 225SMA 4	3GAA222051-••K	1482	94,9	95,5	95,4	0,86	65,4	7,7	238	2,8	3,1	0,536	315	66
45	M3AA 225SMB 4	3GAA222052-••K	1482	95,2	95,6	95,5	0,85	80,2	7,9	289	2,8	3,2	0,536	316	66
55	M3AA 250SMA 4	3GAA252051-••K	1485	95,4	95,9	95,7	0,85	97,8	7,9	353	3,0	3,3	0,933	376	67

Output kW	Motor type	Product code	Speed r/min	Efficiency IEC 60034-30-1; 2014 Full load 100%	3/4 load 75%	1/2 load 50%	Power factor Cosφ	Current I_N A	I_S/I_N	Torque T_N Nm	T_l/T_N	T_b/T_N	Moment of inertia J = 1/4 GD²kgm²	Weight kg	Sound pressure Level L_{PA} dB
1500 r/min = 4 poles				400 V 50 Hz				High-output design							
18.5	M3AA 160MLC 4	3GAA162053-••K	1473	92,6	93,3	93,1	0,82	35,1	8,3	120	3,1	3,5	0,124	135	67
37	M3AA 200MLB 4	3GAA202052-••K	1480	93,9	94,8	94,8	0,82	69,3	7,5	239	2,8	2,9	0,362	244	68
55	M3AA 225SMC 4	3GAA222053-••K	1478	94,6	95,3	95,1	0,84	99,9	7,7	355	3,3	3,3	0,536	318	71
75	M3AA 250SMB 4	3GAA252052-••K	1482	95,0	95,4	95,0	0,84	135	7,9	483	3,3	3,5	0,941	389	73

Note! For missing motor types on generation K list please refer to previous page (L generation data)

Technical data
IE3 aluminum motors, 1000 r/min

IP 55 - IC 411 - Insulation class F, temperature rise class B
IE3 efficiency class according to IEC 60034-30-1; 2014

Output kW	Motor type	Product code	Speed r/min	Efficiency IEC 60034-30-1; 2014 Full load 100%	3/4 load 75%	1/2 load 50%	Power factor Cosφ	Current I_N A	I_S/I_N	Torque T_N Nm	T_l/T_N	T_b/T_N	Moment of inertia J = 1/4 GD²kgm²	Weight kg	Sound pressure Level L_{PA} dB
1000 r/min = 6 poles				400 V 50 Hz				CENELEC-design							
0.75	M3AA 90LB 6	3GAA093520-••J	930	78,9	78,9	76,7	0,68	2,1	3,9	7,7	2,3	2,7	0,0070	17	44
1.1	M3AA 90LD 6	3GAA093540-••J	928	81,0	81,7	81,2	0,77	2,7	4,0	11,3	1,7	2,2	0,0070	19	44
1.5	M3AA 100LC 6	3GAA103530-••J	962	84,7	85,0	83,3	0,69	3,6	5,3	14,9	2,5	3,1	0,0140	28	49
2.2	M3AA 112MB 6	3GAA113320-••J	960	84,3	85,0	84,0	0,65	5,9	5,3	21,9	2,3	3,0	0,0180	33	56
3	M3AA 132S 6	3GAA133100-••J	972	85,6	85,5	83,6	0,69	7,4	5,3	29,5	1,8	3,0	0,0310	48	57
4	M3AA 132MA 6	3GAA133310-••J	964	86,8	88,0	87,8	0,75	8,9	4,5	39,1	1,8	3,0	0,0390	60	61
5.5	M3AA 132MC 6	3GAA133330-••J	970	88,5	89,4	88,8	0,67	13,3	6,1	54,2	2,3	3,1	0,0440	64	61
18.5	M3AA 200MLA 6	3GAA203051-••L	980	91,7	92,5	92,0	0,75	38,8	6,4	180	2,1	3,1	0,220	177	65
37	M3AA 250SMA 6	3GAA253051-••L	985	93,3	94,2	94,0	0,80	71,5	7,0	359	2,7	3,0	0,813	320	68
45	M3AA 280SMA 6	3GAA283051-••L	991	93,7	94,1	93,6	0,81	85,5	7,6	434	2,9	3,3	1,50	399	68
55	M3AA 280SMB 6	3GAA283052-••L	989	94,1	94,7	94,4	0,80	105	7,1	531	3,0	3,1	1,490	400	68

Technical data
IE3 aluminum motors, 1000 r/min

IP 55 - IC 411 - Insulation class F, temperature rise class B
IE3 efficiency class according to IEC 60034-30-1; 2014

Output kW	Motor type	Product code	Speed r/min	Efficiency IEC 60034-30-1; 2014 Full load 100%	3/4 load 75%	1/2 load 50%	Power factor Cosφ	Current I_N A	I_S/I_N	Torque T_N Nm	T_l/T_N	T_b/T_N	Moment of inertia J = 1/4 GD²kgm²	Weight kg	Sound pressure Level L_{PA} dB
1000 r/min = 6 poles				400 V 50 Hz				CENELEC-design							
7.5	M3AA 160MLA 6	3GAA163051-••K	980	90,8	91,5	91,0	0,78	15,2	7,9	73,0	1,7	3,3	0,114	125	59
11	M3AA 160MLB 6	3GAA163052-••K	979	91,2	91,8	91,1	0,74	23,5	8,5	107	2,2	3,9	0,131	139	59
15	M3AA 180MLA 6	3GAA183051-••K	987	92,2	92,4	91,5	0,77	30,4	7,7	145	2,2	3,5	0,225	175	59
18.5	M3AA 200MLA 6	3GAA203051-••K	990	92,8	93,2	92,6	0,77	37,3	7,5	178	2,6	3,2	0,448	218	63
22	M3AA 200MLB 6	3GAA203052-••K	990	93,3	93,7	93,1	0,79	43,0	7,8	212	2,6	3,2	0,531	245	63
30	M3AA 225SMA 6	3GAA223051-••K	989	94,1	94,6	94,4	0,81	56,8	7,9	289	2,8	3,1	0,813	310	63
37	M3AA 250SMA 6	3GAA253051-••K	991	94,4	94,9	94,7	0,83	68,0	7,7	356	2,7	2,9	1,490	367	63

Output kW	Motor type	Product code	Speed r/min	Efficiency IEC 60034-30-1; 2014 Full load 100%	3/4 load 75%	1/2 load 50%	Power factor Cosφ	Current I_N A	I_S/I_N	Torque T_N Nm	T_l/T_N	T_b/T_N	Moment of inertia J = 1/4 GD²kgm²	Weight kg	Sound pressure Level L_{PA} dB
1000 r/min = 6 poles				400 V 50 Hz				High-output design							
18.5	M3AA 180MLB 6	3GAA183054-••K	980	91,7	92,5	92,0	0,75	38,8	6,4	180	2,1	3,1	0,220	168	65
37	M3AA 225SMB 6	3GAA223054-••K	985	93,3	94,2	94,0	0,80	71,5	7,0	359	2,7	3,0	0,813	307	68
45	M3AA 250SMB 6	3GAA253052-••K	991	93,7	94,1	93,6	0,81	85,5	7,6	434	2,9	3,3	1,50	389	68
55	M3AA 250SMC 6	3GAA253053-••K	989	94,1	94,7	94,5	0,80	105	7,1	531	3,0	3,1	1,490	390	68

Note! For missing motor types on generation K list please refer to previous page (L generation data)

Variant codes
Aluminum motors

Variant codes specify additional options and features to the standard motor. The desired features are listed as three-digit variant codes in the motor order. Note also that there are variants that cannot be used together.

Most of the variant codes apply to IE2 and IE3 motors. However, confirm the availability of variants for IE3 motors with your ABB sales office before making an order. Variant codes for L generation motors on request!

	Frame size												
Code/Variants	**63**	**71**	**80**	**90**	**100**	**112**	**132**	**160**	**180**	**200**	**225**	**250**	**280**
Balancing													
423 Balanced without key.	-	-	-	●	●	●	●	●	●	●	●	●	●
424 Full-key balancing	-	-	-	●	●	●	●	●	●	●	●	●	●
Bearings and Lubrication													
036 Transport lock for bearings.	-	-	-	●	●	●	●	●	●	●	●	●	●
037 Roller bearing at D-end.	-	-	-	●	●	●	●	●	●	●	●	●	●
039 Cold-resistant grease	●	●	●	●	●	●	●	-	-	-	-	-	-
040 Heat-resistant grease	●	●	●	●	●	●	●	-	-	-	-	-	-
041 Bearings regreasable via grease nipples.	-	-	-	●	●	●	●	●	●	●	●	●	○
043 SPM compatible nipples for vibration measurement	-	-	-	-	-	●	●	●	●	●	●	●	○
057 2RS bearings at both ends.	●	●	●	●	●	●	●	●	●	●	●	●	●
058 Angular contact bearing at D-end, shaft force away from bearing.	-	-	-	●	●	●	●	●	●	●	●	●	●
059 Angular contact bearing at N-end, shaft force towards bearing.	-	-	-	●	●	●	●	●	●	●	●	●	●
188 63-series bearing in D-end	-	-	-	○	●	○	●	○	○	○	○	○	○
796 Grease nipples JIS B 1575 PT 1/8 Type A	-	-	-	-	-	●	●	●	●	●	●	●	●
797 Stainless steel SPM nipples	-	-	-	-	-	●	●	●	●	●	●	●	●
798 Stainless steel grease nipples	-	-	-	-	-	●	●	●	●	●	●	●	●
Brakes													
412 Built-in brake.	-	-	-	-	-	-	-	●	●	-	-	-	-
Branch standard designs													
071 Cooling Tower duty	-	-	-	-	-	●	●	●	●	●	●	●	●
142 Manilla connection.	-	-	-	●	●	●	●	●	●	●	●	●	●
178 Stainless steel / acid proof bolts.	●	●	●	●	●	●	●	●	●	●	●	●	●
209 Non-standard voltage or frequency, (special winding).	-	-	-	●	●	●	●	●	●	●	●	●	●
217 Cast iron D-end shield (on aluminum motor).	-	-	-	●	●	●	●	○	○	○	○	○	○
425 Corrosion protected stator and rotor core.	-	-	-	●	●	●	●	●	●	●	●	●	●
983 Shock resistant design	-	-	-	-	-	-	-	-	-	●	●	●	-
Cooling system													
053 Metal fan cover.	-	●	●	●	●	●	●	○	○	○	○	○	○
068 Light alloy metal fan	-	●	●	●	●	●	●	●	●	●	●	●	●
075 Cooling method IC418 (without fan).	-	-	-	●	●	●	●	●	●	●	●	●	●
183 Separate motor cooling (fan axial, N-end).	-	●	●	●	●	●	●	●	●	●	●	●	●
189 Separate motor cooling, IP44, 400V, 50Hz (fan axial, N-end).	-	-	-	-	-	-	-	●	●	●	●	●	●
Documentation													
141 Binding dimension drawing.	-	●	●	●	●	●	●	●	●	●	●	●	●
Drain holes													
065 Plugged existing drain holes.	●	●	●	●	●	●	●	●	●	●	●	●	●
Earthing Bolt													
067 External earthing bolt.	●	●	●	●	●	●	●	●	●	●	●	●	●
Hazardous Environments													
334 Ex t, Dust group III B T125C Db, IP6X (non-conductive dust) acc. IEC/EN60079-31.	-	-	-	●	●	●	●	-	-	-	-	-	-
335 Ex t, Dust group III B T125C Dc, IP5X (non-conductive dust) acc. IEC/EN60079-31.	-	-	-	●	●	●	●	-	-	-	-	-	-
336 Ex t, Dust group III C T125 Db, IP6X (conductive dust) acc. IEC/EN60079-31.	-	-	-	●	●	●	●	-	-	-	-	-	-
337 Ex t, Dust group III C T125 Dc, IP6X (conductive dust) acc. IEC/EN60079-31.	-	-	-	●	●	●	●	-	-	-	-	-	-
452 DIP/Ex tD acc. to ATEX directive 94/9/EC , T= 125 °C, cat. 3D, IP55	-	●	●	-	-	-	●	●	●	●	●	●	●
454 DIP/Ex tD acc. to ATEX directive 94/9/EC , T= 125 °C, cat. 3D, IP65	-	-	-	-	-	-	●	-	-	-	-	-	-
456 Ex nA IIC T3 Gc acc. IEC/EN 60079-15 with certificates.	-	-	-	●	●	●	●	-	-	-	-	-	-
480 Ex nA II acc. to ATEX directive 94/9/EC, temp. class T3.	-	●	●	●	●	●	●	●	●	●	●	●	●
Heating elements													
450 Heating element, 100-120 V	-	-	●	●	●	●	●	●	●	●	●	●	●
451 Heating element, 200 - 240 V	●	●	●	●	●	●	●	●	●	●	●	●	●
Insulation system													
014 Winding insulation class H.	-	-	-	●	●	●	●	●	●	●	●	●	●
405 Special winding insulation for frequency converter supply.	-	-	-	●	●	●	●	●	●	●	●	●	●

○ = Included as standard | ● = Available as option | - = Not applicable

		Frame size												
Code/Variants		63	71	80	90	100	112	132	160	180	200	225	250	280
406	Winding for supply > 690 <= 1000 volts	-	-	-	-	-	-	-	-	-	●	●	●	●
Marine														
024	Fulfilling Bureau Veritas (BV) requirements, with certificate.	-	-	-	●	●	●	●	●	●	●	●	●	●
025	Fulfilling Det Norske Veritas (DNV) requirements, with certificate.	●	●	●	●	●	●	●	●	●	●	●	●	●
026	Fulfilling Lloyds Register of Shipping (LR) requirements, with certificate.	●	●	●	●	●	●	●	●	●	●	●	●	●
027	Fulfilling American Bureau of Shipping (ABS) requirements, with certificate.	●	●	●	●	●	●	●	●	●	●	●	●	●
049	Fulfilling Germanischer Lloyd (GL) requirements, with certificate.	●	●	●	●	●	●	●	●	●	●	●	●	●
050	Fulfilling Registro Italiano Navale (RINA) requirements, with certificate.	-	●	●	●	●	●	●	●	●	●	●	●	●
051	Fulfilling Russian Maritime Register of Shipping (RS) requirements, with certificate.	-	-	-	-	-	-	-	●	●	●	●	●	●
096	Fulfilling Lloyds Register of Shipping (LR) requirements, without certificate (non-essential duty only)	●	●	●	●	●	●	●	●	●	●	●	●	●
186	Fulfilling Det Norske Veritas (DNV) requirements, without certificate (non-essential duty only)	●	●	●	●	●	●	●	●	●	●	●	●	●
481	Fulfilling Nippon Kaiji Kyokai (NK) requirements, with certificate.	-	-	-	●	●	●	●	●	●	●	●	●	●
483	Fulfilling China Classification Societies (CCS) requirements (Beijing), with certificate.	-	-	-	●	●	●	●	●	●	●	●	●	●
484	Fulfilling Korea Register of Shipping (KR) requirements, with certificate.	-	-	-	●	●	●	●	●	●	●	●	●	●
491	Fulfilling Nippon Kaiji Kyokai (NK) requirements, without certificate.	●	●	●	●	●	●	●	●	●	●	●	●	●
492	Fulfilling Registro Italiano Navale (RINA) requirements, without certificate.	●	●	●	●	●	●	●	●	●	●	●	●	●
493	Fulfilling China Classification Societies (CCS) requirements (Beijing), without certificate.	●	●	●	●	●	●	●	●	●	●	●	●	●
494	Fulfilling Korea Register of Shipping (KR) requirements, without certificate.	-	-	-	●	●	●	●	●	●	●	●	●	●
496	Fulfilling Bureau Veritas (BV) requirements, without certificate(non-essential duty only)	●	●	●	●	●	●	●	●	●	●	●	●	●
497	Fulfilling Russian Maritime Register of Shipping (RS) requirements, without certificate.	-	-	-	-	-	-	-	●	●	●	●	●	●
675	Fulfilling American Bureau of Shipping (ABS) requirements, without certificate (non-essential duty only)	-	●	●	●	●	●	●	●	●	●	●	●	●
676	Fulfilling Germanischer Lloyd (GL) requirements, without certificate (non-essential duty only)	●	●	●	●	●	●	●	●	●	●	●	●	●
Mounting arrangements														
007	IM 3001 flange mounted, IEC flange, from IM 1001 (B5 from B3).	-	-	-	-	-	-	-	●	●	●	●	●	●
008	IM 2101 foot/flange mounted, IEC flange, from IM 1001 (B34 from B3).	●	●	●	●	●	●	●	●	-	-	-	-	-
009	IM 2001 foot/flange mounted, IEC flange, from IM 1001 (B35 from B3).	●	●	●	●	●	●	●	●	●	●	●	●	●
047	IM 3601 flange mounted, IEC flange, from IM 3001 (B14 from B5).	●	●	●	●	●	●	●	●	-	-	-	-	-
048	IM 3001 flange mounted, IEC flange, from IM 3601 (B5 from B14).	-	●	●	●	●	●	●	-	-	-	-	-	-
066	Modified for specified mounting position differing from IM B3 (1001), IM B5 (3001), B14 (3601), IM B35 (2001), IM B34 (2101)	●	●	●	●	●	●	●	●	●	●	●	●	●
080	(IM 3001) Flange mounted, DIN A-flange.	-	-	-	●	●	-	-	-	-	-	-	-	-
090	(IM 2101) foot/flange mounted, DIN C-flange, from IM 1001 (B34 from B3).	-	-	-	●	●	-	-	-	-	-	-	-	-
091	(IM 2001) foot/flange mounted, DIN A-flange, from IM 1001 (B35 from B3).	-	-	-	●	●	-	-	-	-	-	-	-	-
093	IM 3601 flange mounted, IEC flange, from IM 1001 (B14 from B3).	-	-	-	●	●	●	-	-	-	-	-	-	-
200	Flange ring holder.	-	●	●	●	●	●	●	-	-	-	-	-	-
218	Flange ring FT 85.	-	●	●	-	●	-	-	-	-	-	-	-	-
219	Flange ring FT 100.	-	●	●	-	●	-	-	-	-	-	-	-	-
220	Flange ring FF 100.	-	●	●	-	●	-	-	-	-	-	-	-	-
223	Flange ring FF 115.	-	●	●	-	●	-	-	-	-	-	-	-	-
224	Flange ring FT 115.	-	●	●	-	●	-	-	-	-	-	-	-	-
226	Flange ring FF 130.	-	●	●	●	●	●	-	-	-	-	-	-	-
227	Flange ring FT 130.	-	●	●	●	●	●	-	-	-	-	-	-	-
229	Flange FT 130.	-	-	-	●	-	●	-	-	-	-	-	-	-
233	Flange ring FF 165.	-	-	●	●	●	●	-	-	-	-	-	-	-
234	Flange ring FT 165.	-	●	●	●	●	●	-	-	-	-	-	-	-
235	Flange FF 165.	-	-	-	-	●	-	-	-	-	-	-	-	-
236	Flange FT 165.	-	-	-	-	-	-	●	-	-	-	-	-	-
243	Flange ring FF 215.	-	-	-	-	-	●	●	-	-	-	-	-	-
244	Flange ring FT 215.	-	-	-	-	-	-	●	-	-	-	-	-	-
245	Flange FF 215.	-	-	-	●	-	●	-	-	-	-	-	-	-
253	Flange ring FF 265.	-	-	-	-	-	-	●	-	-	-	-	-	-
254	Flange ring FT 265.	-	-	-	-	-	-	●	-	-	-	-	-	-
255	Flange FF 265.	-	-	-	-	-	-	●	-	-	-	-	-	-
260	Flange FT 115.	-	-	-	-	●	-	-	-	-	-	-	-	-
Painting														
114	Special paint color, standard grade	●	●	●	●	●	●	●	●	●	●	●	●	●
Protection														
005	Protective roof, vertical motor, shaft down.	-	●	●	●	●	●	●	●	●	●	●	●	●
072	Radial seal at D-end. Not possible for 2-pole , 280 and 315 frames	-	●	●	●	●	●	●	●	●	●	●	●	●
158	Degree of protection IP65.	-	●	●	●	●	●	●	●	●	●	●	●	●
211	Weather protected, IP xx W	-	-	-	●	●	●	●	●	●	●	●	●	●

○ = Included as standard | ● = Available as option | - = Not applicable

		Frame size												
Code/Variants		**63**	**71**	**80**	**90**	**100**	**112**	**132**	**160**	**180**	**200**	**225**	**250**	**280**
403	Degree of protection IP56.	●	●	●	●	●	●	●	●	●	●	●	●	●
404	Degree of protection IP56, without fan and fan cover.	-	-	-	●	●	●	●	-	-	-	-	-	-
784	Gamma-seal at D-end.	-	-	-	●	●	●	●	●	●	●	●	●	●
Rating & instruction plates														
002	Restamping voltage, frequency and output, continuous duty.	●	●	●	●	●	●	●	●	●	●	●	●	●
004	Additional text on std rating plate (max 12 digits on free text line).	-	-	-	●	●	●	●	●	●	●	●	●	●
095	Restamping output (maintained voltage, frequency), intermittent duty.	-	●	●	●	●	●	●	●	●	●	●	●	●
098	Stainless rating plate.	●	●	●	●	●	●	●	●	●	●	●	●	●
135	Mounting of additional identification plate, stainless.	-	-	-	●	●	●	●	●	●	●	●	●	-
138	Mounting of additional identification plate, aluminium.	●	●	●	●	●	●	●	●	●	●	●	●	●
139	Additional identification plate delivered loose.	-	-	-	●	●	●	●	●	●	●	●	●	●
159	Additional plate with text “Made in ....”	●	●	●	●	●	●	●	●	●	●	●	●	●
160	Additional rating plate affixed.	-	-	-	●	●	●	●	●	●	●	●	●	●
161	Additional rating plate delivered loose.	●	●	●	●	●	●	●	●	●	●	●	●	●
163	Frequency converter rating plate. Rating data according to quotation.	-	-	-	●	●	●	●	●	●	●	●	●	●
198	Aluminum rating plate.	○	○	○	○	○	○	●	○	○	○	○	○	○
333	Not for use in the USA	-	●	●	●	●	●	●	●	●	●	●	●	●
Shaft & rotor														
069	Two shaft extensions according to catalog drawings.	-	-	-	●	●	●	●	●	●	●	●	●	●
070	Special shaft extension at D-End, standard shaft material	-	-	-	●	●	●	●	-	-	-	-	-	-
131	Motor delivered with half key (key not exceeding shaft diameter)	-	-	-	●	●	●	●	●	●	●	●	●	●
156	Cylindrical shaft extension, N-end, without key-way.	-	-	-	●	●	●	●	-	-	-	-	-	-
165	Shaft extension with open keyway	-	-	-	●	●	●	●	●	●	●	●	●	●
410	Shaft material stainless steel	-	-	-	●	●	-	-	-	-	-	-	-	-
591	Special shaft extension according to customer specification.	-	-	-	●	●	●	●	●	●	●	●	●	●
600	Special shaft extension at N-end, standard shaft material.	-	-	-	●	●	●	●	-	-	-	-	-	-
Standards and Regulations														
010	Fulfilling CSA Safety Certificate.	-	-	-	●	●	●	●	●	●	●	●	●	●
242	Fulfilling CSA Energy Efficiency Verification IE2 (code 010 included)	-	-	-	-	-	-	-	●	●	●	●	●	●
331	IE1 motor not for sale for use in EU	-	●	●	●	●	●	●	●	●	●	●	●	●
408	Fulfilling EISA Subtype II efficiency requirements, CC031A.	-	-	-	-	-	-	-	●	●	●	●	●	●
540	China energy label	-	-	-	●	●	●	●	●	●	●	●	●	●
542	NBR design	-	-	-	●	●	●	●	●	●	●	●	●	●
543	Australian MEPS	-	-	-	●	●	●	●	●	●	●	●	●	-
548	Certificate of conformity according TR-CU 004/2011 for customs union RU, KZ, BY.	-	-	-	●	●	●	●	●	●	●	●	●	●
Stator winding temperature sensors														
121	Bimetal detectors, break type (NCC), (3 in series), 130 °C, in stator winding	●	●	●	●	●	●	●	●	●	●	●	●	●
122	Bimetal detectors, break type (NCC), (3 in series), 150 °C, in stator winding	-	●	●	●	●	●	●	●	●	●	●	●	●
123	Bimetal detectors, break type (NCC), (3 in series), 170 °C, in stator winding	-	-	●	●	●	●	●	●	●	●	●	●	●
124	Bimetal detectors, break type (NCC), (3 in series), 140 °C, in stator winding	-	-	-	-	-	-	-	●	●	●	●	●	●
125	Bimetal detectors, break type (NCC), (2x3 in series), 150 °C, in stator winding	-	-	●	●	●	●	●	●	●	●	●	●	●
127	Bimetal detectors, break type (NCC), (3 in series, 130 °C & 3 in series, 150 °C), in stator winding	-	-	●	●	●	●	●	●	●	●	●	●	●
321	Bimetal detectors, closing type (NO), (3 in parallel), 130°C, in stator winding.	-	-	-	●	●	●	●	-	-	-	-	-	-
322	Bimetal detectors, closing type (NO), (3 in parallel), 150°C, in stator winding.	-	-	-	●	●	●	●	-	-	-	-	-	-
323	Bimetal detectors, closing type (NO), (3 in parallel), 170°C, in stator winding.	-	-	-	●	●	-	-	-	-	-	-	-	-
325	Bimetal detectors, closing type (NO), (2x3 in parallel), 150°C, in stator winding.	-	-	-	●	●	●	●	-	-	-	-	-	-
327	Bimetal detectors, closing type (NO), (3 in parallel, 130°C & 3 in parallel, 150°C), in stator winding.	-	-	-	●	●	●	●	-	-	-	-	-	-
435	PTC - thermistors (3 in series), 130 °C, in stator winding	●	●	●	●	●	●	●	●	●	●	●	●	●
436	PTC - thermistors (3 in series), 150 °C, in stator winding	●	●	●	●	●	●	●	○	○	○	○	○	○
437	PTC - thermistors (3 in series), 170 °C, in stator winding	-	-	-	●	●	●	●	●	●	●	●	●	●
439	PTC - thermistors (2x3 in series), 150 °C, in stator winding	●	●	●	●	●	●	●	●	●	●	●	●	●
440	PTC - thermistors (3 in series, 110°C & 3 in series, 130°C), in stator winding.	-	-	-	●	●	●	●	-	-	-	-	-	-
441	PTC - thermistors (3 in series, 130 °C & 3 in series, 150 °C), in stator winding	●	●	●	●	●	●	●	●	●	●	●	●	●
442	PTC - thermistors (3 in series, 150 °C & 3 in series, 170 °C), in stator winding	-	-	-	●	●	●	●	●	●	●	●	●	●
445	Pt100 2-wire in stator winding, 1 per phase	-	-	-	●	●	●	●	●	●	●	●	●	●
446	Pt100 2-wire in stator winding, 2 per phase	-	-	-	-	-	-	-	●	●	●	●	●	●
Terminal box														
015	Motor supplied in D connection.	-	-	-	●	●	●	●	●	●	●	●	●	●
016	9 terminals in terminal box	-	-	-	●	●	●	●	-	-	-	-	-	-
017	Motor supplied in Y connection.	-	-	-	●	●	-	-	●	●	●	●	●	●
019	Larger than standard terminal box.	-	-	-	-	-	-	-	-	-	●	●	●	●
021	Terminal box LHS (seen from D-end).	-	-	-	-	-	-	-	-	-	●	●	●	●
180	Terminal box RHS (seen from D-end).	-	-	-	-	-	-	-	-	-	●	●	●	●
230	Standard metal cable gland.	-	●	●	●	●	●	●	●	●	●	●	●	●

○ = Included as standard | ● = Available as option | - = Not applicable

		Frame size												
Code/Variants		63	71	80	90	100	112	132	160	180	200	225	250	280
375	Standard plastic cable gland	-	●	●	●	●	●	●	-	-	-	-	-	-
376	Two standard plastic cable glands	-	-	-	●	●	●	●	-	-	-	-	-	-
418	Separate terminal box for auxiliaries, standard material.	-	-	-	-	-	●	●	●	●	●	●	●	●
467	Lower than standard terminal box and rubber extended cable. Cable length 2 m	-	-	-	-	-	-	-	●	●	●	●	●	●
729	Aluminum non-drilled flange for cable glands	-	-	-	-	-	-	-	-	-	●	●	●	●
731	Two standard metal cable glands.	-	●	●	●	●	●	●	●	●	●	●	●	●
739	Prepared for metric cable glands according to DIN 42925, draft aug. 1999.	-	-	-	-	-	●	●	-	-	-	-	-	-
740	Prepared for PG cable glands.	-	-	-	-	-	●	●	●	●	●	●	●	●
Testing														
140	Test confirmation.	-	-	-	-	-	-	-	●	●	●	●	●	●
145	Type test report from a catalogue motor, 400V 50Hz.	-	-	●	●	●	●	●	●	●	●	●	●	●
146	Type test with report for one motor from specific delivery batch.	-	-	-	●	●	●	●	●	●	●	●	●	●
147	Type test with report for motor from specific delivery batch, customer witnessed.	-	-	-	●	●	●	●	●	●	●	●	●	●
148	Routine test report.	-	●	●	●	●	●	●	●	●	●	●	●	●
153	Reduced test for classification society.	-	-	-	●	●	●	●	●	●	●	●	●	●
221	Type test and multi-point load test with report for one motor from specific delivery batch.	-	-	-	●	●	●	●	●	●	●	●	●	●
222	Torque/speed curve, type test and multi-point load test with report for one motor from specific delivery batch.	-	-	-	●	●	●	●	●	●	●	●	●	●
760	Vibration level test	-	-	-	●	●	●	●	●	●	●	●	●	●
762	Noise level test for one motor from specific delivery batch.	-	-	-	●	●	●	●	●	●	●	●	●	●
Variable speed drives														
470	Prepared for hollow shaft pulse tacho (L&L equivalent).	-	-	-	-	-	-	-	●	●	●	●	●	●
472	1024 pulse tacho (L&L 861007455-1024).	-	-	-	-	-	-	-	●	●	●	●	●	●
473	2048 pulse tacho (L&L 861007455-2048).	-	-	-	-	-	-	-	●	●	●	●	●	●
474	Separate motor cooling (axial fan, N-end) and prepared for hollow shaft tacho (L&L equivalent)	-	-	-	-	-	-	-	●	●	●	●	●	●
476	Separate motor cooling (axial fan, N-end) and 1024 pulse tacho (L&L 861007455-1024)	-	-	-	-	-	-	-	●	●	●	●	●	●
477	Separate motor cooling (axial fan, N-end) and 2048 pulse tacho (L&L 861007455-2048)	-	-	-	-	-	-	-	●	●	●	●	●	●
570	Prepared for hollow shaft pulse tacho (L&L 503).	-	-	-	-	-	-	-	●	●	●	●	●	●
572	1024 pulse tacho (L&L 503).	-	-	-	-	-	-	-	●	●	●	●	●	●
573	2048 pulse tacho (L&L 503).	-	-	-	-	-	-	-	●	●	●	●	●	●
574	Separate motor cooling (fan axial, N-end) and prepared for hollow shaft tacho (L&L 503).	-	-	-	-	-	-	-	●	●	●	●	●	●
576	Separate motor cooling (fan axial, N-end) and 1024 pulse tacho (L&L 503).	-	-	-	-	-	-	-	●	●	●	●	●	●
577	Separate motor cooling (fan axial, N-end) and 2048 pulse tacho (L&L 503).	-	-	-	-	-	-	-	●	●	●	●	●	●
580	Separate motor cooling, IP44, 400 V, 50Hz (axial fan, N-end) and 1024 pulse tacho (L&L 503)	-	-	-	-	-	-	-	●	●	●	●	●	●
581	Separate motor cooling, IP44, 400V, 50Hz (fan axial, N-end) and 2048 pulse tacho (L&L 503).	-	-	-	-	-	-	-	●	●	●	●	●	●
661	1024 Pulse tacho mounted, Hohner series 59, 11-30V	-	-	-	●	●	●	●	-	-	-	-	-	-
662	2048 Pulse tacho mounted, Hohner series 59, 11-30V	-	-	-	●	●	●	●	-	-	-	-	-	-
701	Insulated bearing at N-end.	-	-	-	-	-	-	-	●	●	●	●	●	●
704	EMC cable entry.	-	-	-	●	●	●	●	●	●	●	●	●	●

○ = Included as standard | ● = Available as option | - = Not applicable

Mechanical design
Motor frame and drain holes

Motor frame
The motor frame is made of aluminum alloy. Frame sizes 63 to 180 have aluminum feet and sizes 200 to 280 have cast iron feet.

The bearing end shields of sizes 63 to 132 are made of aluminum, and those of 160 to 280 are made of cast iron.

Drain holes
Motors that will be operated in very humid or wet environments and especially under intermittent duty should be provided with drain holes. The IM designation, such as IM 3031, determines the intended mounting arrangement for the motor.

Motors are provided with closable plastic plugs in the drain holes. The plugs on delivery, when mounting the motors, ensure that the drainholes face downwards. In the case of vertical mounting, the upper plug must be hammered home completely. In very dusty environments both plugs should be hammered home.

Motors are supplied with drain holes both at the D-end and N-end.

When mounting arrangement differs from foot mountedIM B3, please use variant code 066 when ordering.See variant codes 065, 066 and 076 under the heading “Drain holes”.

Bearings

The motors are provided with bearings according to the tables below.
Greater axial forces can be tolerated if the motors are provided with angular contact ball bearings.

Standard design: deep groove ball bearings

Motor size		Foot- and flange-mounted motor	
		D-end	N-end
63		6202-2Z/C3	6201-2Z/C3
71		6203-2Z/C3	6202-2Z/C3
80		6204-2Z/C3	6203-2Z/C3
90		6205-2Z/C3	6204-2Z/C3
100		6306-2Z/C3	6205-2Z/C3
112		6306-2Z/C3	6205-2Z/C3
132 [1]		6208-2Z/C3	6206-2Z/C3
132 [2]		6308-2Z/C3	6206-2Z/C3
160		6309-2Z/C3	6209-2Z/C3
180		6310-2Z/C3	6209-2Z/C3
200		6312-2Z/C3	6210-2Z/C3
225		6313-2Z/C3	6212-2Z/C3
250		6315-2Z/C3	6213-2Z/C3
280	2 pole	6315/C3	6213/C3
280	4-8 pole	6316/C3	6213/C3

[1] all types except [2]SM_

Note that in such cases the axial force must only operate in one direction.
Motor versions with roller bearings tolerate greater radial forces.

Alternative design with roller bearings

It is recommended to use roller bearings in belt drives for motor sizes 160 to 280.

See variant code 037 under the heading “Bearings and lubrication”.

Motor size		Foot- and flange-mounted motor	
		D-end	N-end
63		-	6201-2Z/C3
71		-	6202-2Z/C3
80		-	6203-2Z/C3
90		NU 205	6204-2Z/C3
100		NU 306	6205-2Z/C3
112		NU 306	6205-2Z/C3
132 [1]		NU 208	6206-2Z/C3
132 [2]		NU 308	6206-2Z/C3
160		NU 309 ECP	6209-2Z/C3
180		NU 310 ECP	6209-2Z/C3
200		NU 312 ECP	6210-2Z/C3
225		NU 313 ECP	6212-2Z/C3
250		NU 315 ECP	6213-2Z/C3
280	2 pole	NU 315 ECP	6213/C3
280	4-8 pole	NU 316 ECP	6213/C3

[1] all types except [2]SM_

Alternative design: angular contact ball bearings

See variant codes 058 and 059 under the heading “Bearings and lubrication”.

Motor size		D-end	N-end
		058	059
63		-	-
71		-	-
80		-	-
90		7205 B	7204 B
100		7306 B	7205 B
112		7306 B	7205 B
132 [1]		7208 B	7206 B
132 [2]		7308 B	7206 B
160		7309 BEP	7209 BEP
180		7310 BEP	7209 BEP
200		7312 BEP	7210 BEP
225		7313 BEP	7212 BEP
250		7315 BEP	7213 BEP
280	2 pole	7315 BEP	7213 BEP
280	4-8 pole	7316 BEP	7213 BEP

[1] all types except [2]SM_

Transport locking

Motors provided with roller bearings or angular contact ball bearings are fitted with a transport lock to prevent damage to the bearings, due to vibration, during transport.

Axially locked bearings

The table below shows which of the motor’s bearings are axially locked in the bearing seat. In motor size 63 the locking is done by an internal retaining ring, in motor sizes 71 to 280 by an inner bearing cover.

Motor size	Foot-mounted motors	Flange-mounted motors	
		Large flange	Small flange
63	On request at D-end	On request at D-end	On request at D-end
71-132	D-end [1]	D-end 1)	D-end 1)
160-280	D-end	D-end	-

[1] A spring-washer at the N-end presses the rotor toward the D-end.

Bearing seals

Motor size	Number of poles	Standard design, axial seal		Alternative design Radial seal (Din3760) Variant code 073
		D-end	N-end	
71	2-12	V-16A	Labyrinth seal	17x28x7
80	2-12	V-20A	Labyrinth seal	20x40x7
90	2-12	V-25A	Labyrinth seal	25x42x7
100	2-12	V-30A	Labyrinth seal	30x47x7
112	2-12	V-30A	Labyrinth seal	30x47x7
132	2-12	V-40A	Labyrinth seal	40x62x7
160	2-12	V-45A	V-45A	45x65x8
180	2-12	V-50A	V-45A	50x72x8
200	2-12	V-60A	V-50A	60x80x8
225	2-12	V-65A	V-60A	65x85x8
250	2-12	V-75A	V-65A	75x95x8

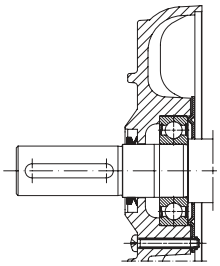

Motor sizes 71 - 132

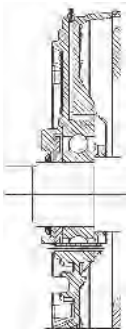

Motor sizes 160 - 250

Bearing life and lubrication

Bearing life

The nominal life is defined as the number of hours that are attained or exceeded by 90 percent of identical bearings, in a large test series, under certain specified conditions.50 percent of the bearings attain a life of as much as5 times this figure.

The life of bearings is dependent on various factors such as bearing load, motor speed, operating temperature and the purity of the grease. The permissible radial and axial loading for different motor sizes is shown in the table on the following pages.

The table is valid for 50 Hz. For 60 Hz and/or some other bearing life than specified in the table the values are changed according to the table below.

The table values assume the occurrence of only radial or axial forces. In the case of simultaneous radial and axial forces information can be supplied on request. It is assumed that the radial force is applied at the end of the motor shaft.

Permissible force at changed bearing life or supply frequency

Bearing life in hours at		
50 Hz	60 Hz	
25 000	21 000	100 % of value for 25.000 hours
40 000	33 000	100 % of value for 40.000 hours
63 000	52 000	86 % of value for 40.000 hours
80 000	67 000	80 % of value for 40.000 hours

Lubrication

The motors are delivered with bearing grease for use at normal temperatures in dry or humid environments. The motors are lubricated for ambient temperatures 40°C and in other temperatures above 40°C, see table next page.

Motor sizes 63 to 250 are provided with shielded bearings. As an option, motor sizes 90 to 250 are provided with grease nipples for regreasing, see variant code 041 under the heading ”Bearings and lubrications”.

Motor size 280 is provided with grease nipples for re-greasing as standard.

The lubrication interval L_1, suitable for relubricated bearings, is defined as the number of operating hours after which 99 percent of the bearings are adequately lubricated.

Lubrication intervals and grease quantities are specified on a plate on the motor as well as in the manual supplied with the motor.

The grease lifetime L_{10}, suitable for permanent lubricated bearings, is defined as the number of operating hours after which 90 percent of the bearings are adequately lubricated. 50 percent of the bearings achieve two times this figure. Maximum lifetime, however, should be regarded as 40,000 hours.

In case of high ambient temperatures the shaft loads must be reduced compared to permissible loadings in the table, please contact ABB.

Lubrication intervals

ABB follows the L_1-principle in defining lubrication interval. That means that 99 percent of the motors are sure to make the interval time. The lubrication intervals can also be calculated according to the L_{10}-principle, which are normally doubled compared to L_1-values. Values available from ABB at request.

The table below gives lubrication intervals according to the L_1-principle for different speeds. The values are valid for horizontal mounted motors (B3), with about 80°C bearing temperature and using good quality grease with lithium complex soap and with mineral or PAO-oil.

For more information, see ABB’s Low Voltage Motors Manual.

Lubrication intervals for ball and roller bearings

Frame size	Amount of grease g	3600 r/min	3000 r/min	1800 r/min	1500 r/min	1000 r/min	500-750 r/min
Ball bearings: lubrication intervals in duty hours							
280	60	2000	3500	-	-	-	-
280	70	-	-	8000	10 500	14 000	17 000
Roller bearings: lubrication intervals in duty hours							
280	60	1000	1750	-	-	-	-
280	70	-	-	4000	5250	7000	8500

Grease lifetime

In vertically mounted motors, the grease lifetime is half the figures as in following table.For applications corresponding to the empty cells in the table, please contact ABB. These applications can imply reduced lifetime for bearings and winding.Motors with roller bearings (optional) have considerably shorter grease life. For continuous operation regreasing nipples should be considered.

Grease lifetime

Ambient temperature and rated output

		25 °C		40 °C		50 °C		60 °C		70 °C		80 °C	
Motor	r/min	Basic	High	Basic	High	Basic	High	Basic	High	Basic	High	Basic	High
63	3000	40 000	40 000	40 000	40 000	40 000	40 000	31 000	31 000	17 000	17 000	9000	9000
	1500	40 000	40 000	40 000	40 000	40 000	40 000	33 000	33 000	18 000	18 000	9000	9000
	1000	40 000	40 000	40 000	40 000	40 000	40 000	33 000	33 000	18 000	18 000	9000	9000
	750	40 000	40 000	40 000	40 000	40 000	40 000	33 000	33 000	18 000	18 000	9000	9000
71	3000	40 000	40 000	40 000	40 000	40 000	40 000	27 000	27 000	15 000	15 000	8000	8000
	1500	40 000	40 000	40 000	40 000	40 000	40 000	33 000	33 000	18 000	18 000	9000	9000
	1000	40 000	40 000	40 000	40 000	40 000	40 000	33 000	33 000	18 000	18 000	9000	9000
	750	40 000	40 000	40 000	40 000	40 000	40 000	33 000	33 000	18 000	18 000	9000	9000
80	3000	40 000	40 000	40 000	40 000	39 000	39 000	23 000	23 000	13 000	13 000	7000	7000
	1500	40 000	40 000	40 000	40 000	40 000	40 000	33 000	33 000	18 000	18 000	9000	9000
	1000	40 000	40 000	40 000	40 000	40 000	40 000	33 000	33 000	18 000	18 000	9000	9000
	750	40 000	40 000	40 000	40 000	40 000	40 000	33 000	33 000	18 000	18 000	9000	9000
90	3000	40 000	40 000	40 000	40 000	33 000	33 000	20 000	20 000	11 000	11 000	6000	6000
	1500	40 000	40 000	40 000	40 000	40 000	40 000	33 000	33 000	18 000	18 000	9000	9000
	1000	40 000	40 000	40 000	40 000	40 000	40 000	33 000	33 000	18 000	18 000	9000	9000
	750	40 000	40 000	40 000	40 000	40 000	40 000	33 000	33 000	18 000	18 000	9000	9000
100	3000	40 000	40 000	39 000	39 000	25 000	25 000	15 000	15 000	8000	8000	4000	4000
	1500	40 000	40 000	40 000	40 000	40 000	40 000	30 000	30 000	17 000	17 000	9000	9000
	1000	40 000	40 000	40 000	40 000	40 000	40 000	33 000	33 000	18 000	18 000	9000	9000
	750	40 000	40 000	40 000	40 000	40 000	40 000	33 000	33 000	18 000	18 000	9000	9000
112	3000	40 000	40 000	39 000	39 000	25 000	25 000	15 000	15 000	8000	8000	4000	4000
	1500	40 000	40 000	40 000	40 000	40 000	40 000	30 000	30 000	17 000	17 000	9000	9000
	1000	40 000	40 000	40 000	40 000	40 000	40 000	33 000	33 000	18 000	18 000	9000	9000
	750	40 000	40 000	40 000	40 000	40 000	40 000	33 000	33 000	18 000	18 000	9000	9000
132 [1]	3000	40 000	40 000	33 000	33 000	21 000	21 000	13 000	13 000	7000	7000	4000	4000
	1500	40 000	40 000	40 000	40 000	40 000	40 000	26 000	26 000	14 000	14 000	7000	7000
	1000	40 000	40 000	40 000	40 000	40 000	40 000	33 000	33 000	18 000	18 000	9000	9000
	750	40 000	40 000	40 000	40 000	40 000	40 000	33 000	33 000	18 000	18 000	9000	9000
132 [2]	3000	40 000	40 000	31 000	31 000	20 000	20 000	12 000	12 000	6000	6000	3000	3000
	1500	40 000	40 000	40 000	40 000	40 000	40 000	24 000	24 000	13 000	13 000	7000	7000
	1000	40 000	40 000	40 000	40 000	40 000	40 000	33 000	33 000	18 000	18 000	9000	9000
	750	40 000	40 000	40 000	40 000	40 000	40 000	33 000	33 000	18 000	18 000	9000	9000
160	3000	40 000	40 000	40 000	36 000	40 000	19 000	26 000	9000	14 000	5000	8000	2000
	1500	40 000	40 000	40 000	40 000	40 000	40 000	40 000	38 000	40 000	20 000	37000	10 000
	1000	40 000	40 000	40 000	40 000	40 000	40 000	40 000	40 000	40 000	24 000	40 000	12 000
	750	40 000		40 000		40 000		40 000		40 000		40 000	
180	3000	38 000	38 000	38 000	38 000	38 000	38 000	38 000	23 000	23 000	12 000	13 000	7000
	1500	40 000	40 000	40 000	40 000	40 000	24 000	40 000	12 000	26 000	6000	13 000	3000
	1000	40 000	40 000	40 000	40 000	40 000	40 000	40 000	40 000	40 000	24 000	29 000	12 000
	750	40 000		40 000		40 000		40 000		37000		21 000	
200	3000	27 000	27 000	27 000	27 000	27 000	18 000	24 000	10 000	14 000	5000	8000	3000
	1500	40 000	40 000	40 000	40 000	40 000	40 000	40 000	32000	40 000	18 000	30 000	10 000
	1000	40 000	40 000	40 000	40 000	40 000	40 000	40 000	40 000	40 000	30 000	38 000	17 000
	750	40 000		40 000		40 000		40 000		40 000		40 000	
225	3000	23 000	23 000	23 000	18 000	23 000	10 000	20 000	6000	12 000	3000	7000	1000
	1500	40 000	40 000	40 000	40 000	40 000	23 000	40 000	12 000	40 000	6000	25 000	3000
	1000	40 000	40 000	40 000	40 000	40 000	40 000	40 000	40 000	40 000	40 000	40 000	27 000
	750	40 000		40 000		40 000		40 000		40 000		40 000	
250	3000	16 000	16 000	16 000	13 000	16 000	7000	12 000	4000	7000	2000	4000	1000
	1500	40 000	40 000	40 000	39 000	40 000	21 000	40 000	11 000	33 000	6000	19 000	3000
	1000	40 000	40 000	40 000	40 000	40 000	40 000	40 000	40 000	40 000	25 000	36 000	13 000
	750	40 000		40 000		40 000		40 000		40 000		40 000	

[1] all types except [2] SM_

Grease lifetime L_{10} in deep groove ball bearings of type 2Z in horizontally mounted motors in continuous running duty.

Radial forces

Permissible loading on shaft

The tables give the permissible radial force in Newtons, assuming zero axial force, ambient temperature of 25°C.

Permissible loads of simultaneous radial and axial forces will be supplied on request.

The bearing life, L_{10}, is calculated according to SKF's theory on bearing life L_{10aah}, which also takes the purity of the grease into consideration. An adequate lubrication is a necessary prerequisite for the table at right.

If the radial force is applied between points X_0 and X_{max}, the permissible force F_R can be calculated from the following formula:

$$F_R = F_{X0} - \frac{X}{E} (F_{X0} - F_{Xmax})$$

Where:	
E:	length of the shaft extension in the standard version

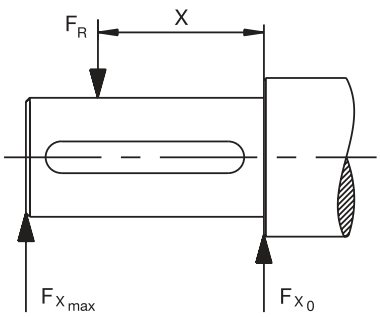

Permissible radial forces

Motor sizes 63 to 132

Motor size	Poles	Length of shaft extension E (mm)	Ball bearings Basic design with deep groove ball bearings			
			25000 hours		40000 hours	
			F_{x0} (N)	F_{Xmax} (N)	F_{x0} (N)	F_{Xmax} (N)
63	2-8	23	490	400	490	400
71	2-8	30	680	570	680	570
80	2	40	630	750	930	750
80	4-8	40	930	750	930	750
90	2-8	50	1010	810	1010	810
100	2-8	60	2280	1800	2280	1800
112	2-8	60	2280	1800	2280	1800
132 [1]	2-8	80	2120	1610	2120	1610
132 [2]	2-8	80	2600	2100	2600	2100

[1] 62-series bearings
[2] 63-series bearings

Motor sizes 160 to 280

Motor size	Poles	Length of shaft extension E (mm)	Ball bearings Basic design with deep groove ball bearings				Roller bearings Alternative design with roller bearings			
			20 000 hrs		40 000 hrs		20 000 hrs		40 000 hrs	
			F_{x0}(N)	F_{Xmax}(N)	F_{x0}(N)	F_{Xmax}(N)	F_{x0}(N)	F_{Xmax}(N)	F_{x0}(N)	F_{Xmax}(N)
160	2	110	4760	3860	4100	3320	6580	4300	5620	4300
	4	110	5180	4200	4380	3545	7340	4300	6180	4300
	6	110	5160	4180	4360	3540	7780	4300	6500	4300
	8	110	6280	4300	5320	4300	8860	4300	7440	4300
180	2	110	6060	4960	5280 [1]	4305 [1]	7600	5500	6560	5500
	4	110	4800	3940	4020	3300	7280	5500	6140	5500
	6	110	6280	5140	5280	4380	8680	5500	7280	5500
	8	110	6960	5500	5880	4800	9440	5500	7920	5500
200	2	110	7800	6500	6760 [2]	5640 [2]	10 360	8640	8880	7400
	4	110	8400	7020	7180	5980	11 560	9550	9800	8180
	6	110	8960	7480	7600	6340	12 480	9550	10 520	8780
	8	110	10480	8740	8940	7400	14 100	9550	11 920	9550
225	2	110	8520	7180	7360 [3]	6200 [3]	12 320	10 380	10 560	8900
	4	140	8380	6780	7200	5820	13 380	10 250	11 320	9160
	6	140	10 960	8860	9360	7560	15 860	10 250	13 420	10 250
	8	140	12 100	9780	10 340	8360	17 220	10 250	14 580	10 250
250	2	140	10 480 4)	8500 4)	9080 [4]	7360 [4]	16 220	10 900	13 960	10 900
	4	140	10 840	8780	9380	7600	18 020	13 800	15 320	13 800
	6	140	12 600	10 220	10 700	8680	20 240	13 800	17 140	13 800
	8	140	14 660	11 880	12 540	10 160	22 680	13 800	19 220	13 800
280	2	140	6780	5500	5680	4600	16 280	13 200	14 000	11 360
	4	140	8060	6540	6640	5380	19 480	15 780	16 540	13 400
	6	140	8980	7280	7360	5960	21 920	17 760	18 580	15 060
	8	140	9180	7460	7460	6060	22 240	18 020	18 860	15 300

[1] The maximum lifetime of the grease is 38000 h
[2] The maximum lifetime of the grease is 27000 h
[3] The maximum lifetime of the grease is 23000 h
[4] The maximum lifetime of the grease is 16000 h

Axial forces

The following tables present permissible axial forces on the shaft in Newtons, assuming zero radial force, a 25 °C ambient temperature, and normal conditions. The values are given for a calculated bearing life of 20,000 and 40,000 hours per motor size.

At 60 Hz, the values must be reduced by 10 percent, and for two-speed motors, the higher speed determines permissible axial force. Permissible loads of simultaneous radial and axial forces can be supplied on request.

For axial force F_{AD}, it is assumed that the D-bearing is locked with a locking ring.

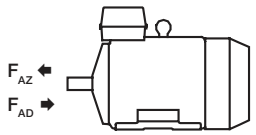

Mounting arrangement IM B3

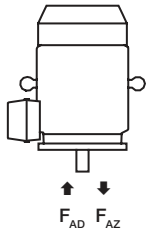

Mounting arrangement IM V1

Permissible axial forces, motor sizes 63 - 280

		Mounting arrangement IM B3, deep groove ball bearings				Mounting arrangement IM V1, deep groove ball bearings			
		20 000 hours		40 000 hours		20 000 hours		40 000 hours	
Motor size	Poles	F_{AD} (N)	F_{AZ} (N)	F_{AD} (N)	F_{AZ} (N)	F_{AD} (N)	F_{AZ} (N)	F_{AD} (N)	F_{AZ} (N)
63	2	480	125	420	105	495	115	440	95
	4	565	165	470	115	585	155	490	105
	6	580	190	490	145	600	180	550	115
	8	590	195	590	205				
71	2	625	325	515	215	640	315	530	200
	4	780	480	630	330	800	470	650	320
	6	890	590	710	410	925	570	745	390
	8	985	685	780	480	1020	665	815	455
80	2	810	470	650	315	845	450	690	290
	4	1015	675	810	470	1075	640	865	430
	6	1170	830	925	595	1225	795	980	550
	8	1300	960	1015	675	1350	925	1070	645
90	2	885	485	720	320	945	450	775	280
	4	1170	650	945	425	1245	600	1020	375
	6	1270	870	1005	605	1360	815	1095	550
	8	1410	1010	1110	710	1485	960	1185	660
100	2	1620	1120	1280	780	1710	1060	1370	715
	4	2065	1565	1615	1115	2180	1485	1735	1035
	6	2390	1890	1860	1360	2510	1815	1980	1285
	8	2660	2160	2065	1565	2780	2080	2185	1485
112 M, MB	2	1615	1115	1275	775	1725	1040	1385	700
	4	2060	1560	1610	1110	2210	1460	1110	1010
	6	2385	1885	1860	1360	2540	1785	2010	1260
	8	2655	2155	2060	1560	2790	2055	2195	1475

Permissible axial forces, motor sizes 63 - 280

		Mounting arrangement IM B3, deep groove ball bearings				Mounting arrangement IM V1, deep groove ball bearings			
		20 000 hours		40 000 hours		20 000 hours		40 000 hours	
Motor size	Poles	F_{AD} (N)	F_{AZ} (N)	F_{AD} (N)	F_{AZ} (N)	F_{AD} (N)	F_{AZ} (N)	F_{AD} (N)	F_{AZ} (N)
132 M, MA	4	2245	1645	1760	1160	2460	1505	1970	1015
	6	2595	1980	2025	1425	2815	1850	2245	1280
	8	2875	2270	2240	1640	3130	2115	2490	1470
132 MC	6	2580	1980	2010	1410	2885	1780	2315	1210
132 MBA	4	2235	1635	1750	1150	2495	1465	2010	980
132 S	6	2600	2000	2030	1435	2780	1885	2210	1315
	8	2885	2285	2245	1645	3100	2145	2460	1505
132 SB	2	1760	1160	1400	800	1910	1075	1540	705
132 SBB, SC	2	1760	1160	1395	795	1945	1045	1575	670
132 SMB, SMC	2	2210	1610	1740	1140	2435	1470	1950	985
	4	2840	2240	2205	1605	3150	2035	2515	1400
132 SMD	4	2830	2200	2230	1595	3195	1995	2560	1355
132 SME	2	2210	1610	1730	1130	2490	1425	2005	940
160	2	4160	4160	3425	3425	4560	3810	3860	3110
	4	4740	4740	3920	3920	5260	4310	4440	3490
	6	4840	4840	4000	4000	5400	4420	4540	3560
	8	5980	5980	4920	4920	6560	5580	5460	4480
180	2	5480	5480	4600 [1]	4600 [1]	5920	5115	5060 [1]	4255 [1]
	4	4360	4360	3540	3540	5080	3860	4240	3020
	6	5980	5980	4940	4630	6000	5445	5600	4385
	8	6000	6620	5460	5460	6000	6120	6000	4900
200	2	5000	6880	5000 [2]	5700 [2]	5000	6350	5000 [2]	5230 [2]
	4	5000	7660	5000	6340	5000	6950	5000	5650
	6	5000	8300	5000	6880	5000	7505	5000	6025
	8	5000	9880	5000	8160	5000	9215	5000	7435
225	2	5000	7380	5000 [3]	6120 [3]	5000	6770	5000 [3]	5490 [3]
	4	5000	7600	5000	6220	5000	6795	5000	5475
	6	5000	10140	5000	8420	5000	9270	5000	7490
	8	5000	11 420	5000	9460	5000	10 595	5000	8535
250	2	6000 [4]	9020 [4]	6000 [4]	7500 [4]	6000 [4]	8335 [4]	6000 [4]	6755 [4]
	4	6000	9800	6000	8040	6000	8820	6000	7120
	6	6000	11520	6000	9520	6000	10 275	6000	8235
	8	6000	13 700	6000	11 380	6000	12 645	6000	10 205
280	2	5260	5260	4220	4220	6400	4400	5420	3420
	4	6500	6500	5160	5160	7920	5400	6640	4120
	6	7500	7500	6040	6040	8500	6180	7840	4640
	8	7740	7740	6180	6180	8500	6435	7980	4775

[1] The maximum lifetime of the grease is 38 000 h
[2] The maximum lifetime of the grease is 27 000 h
[3] The maximum lifetime of the grease is 23 000 h
[4] The maximum lifetime of the grease is 16 000 h

Terminal box

Sizes 63 to 180

The terminal box is made of aluminum alloy and is located on top of the stator. The lower part of the box is integrated with the stator. It is provided with two knockout openings on each side. Sizes 132 SM_ and 160 - 180 also have a third smaller opening. Cable glands are not included.

Sizes 200 to 280

The terminal box and cover are made of deep drawn steel and mounted on top of the stator. The box is bolted to the stator and is not rotatable. The size of the box is the same for all frame sizes.

The motors can also be provided with an extra large terminal box, standard for voltage code S and frame size 280. See variant code 019 under the heading “Terminal box”. This will increase the dimension HD by 32 mm. The box is supplied with two FL 21 openings. The right opening is provided with a flange with two holes for M63 cable glands. The holes are sealed by means of plastic plugs. Cable glands are not supplied. The opening on the other side is provided with a cover flange. The box can also be provided with an FL 13 opening towards the N-end.

When new motors are manufactured the terminal box can be mounted on the left or the right side. See variant codes 021 and 180 under the heading “Terminal box”.

In the basic design the terminal box is provided with twoFL 13 flange openings, one on each side. The opening on the right side, seen from the D-end, is supplied with a flange with two holes for M40 cable glands. On delivery the holes are sealed by means of plastic plugs. Cable glands are not supplied. The opening on the other side is provided with a cover flange.

Dimensions for terminal box

Motor size	Dimensions		
	HB	HD	HE
Code 019: Larger than standard terminal box			
200 ML	332.5	603	240
225 SM	353	578	260.5
250 SM	376	626	283.5
Code 021: Terminal box on left-hand side seen from D end			
Code 180: Terminal box on right-hand side seen from D end			
200 ML	332	532	239
225 SM	354	579	260.5
250 SM	377	627	284
Code 467: Lower than standard terminal box without screw terminals and extended rubber connection cable 2 m.			
160	211.5	371.5	
180	226.5	406.5	
200 ML	248	448	
225 SM	269	494	
250 SM	292	542	
280	292	572	

Refer to the Dimension drawings section for dimensions HB, HD and HE.

Connections

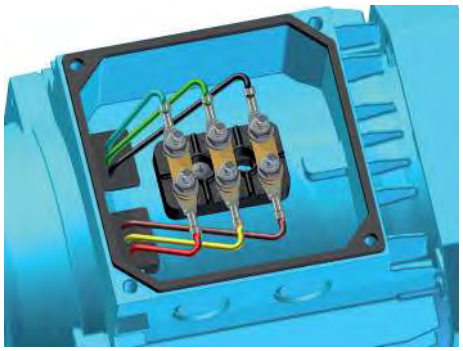

Terminal board for motor sizes 63 to 80

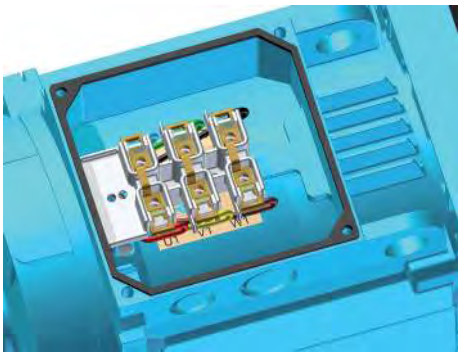

Terminal board for motor sizes 90 to 112

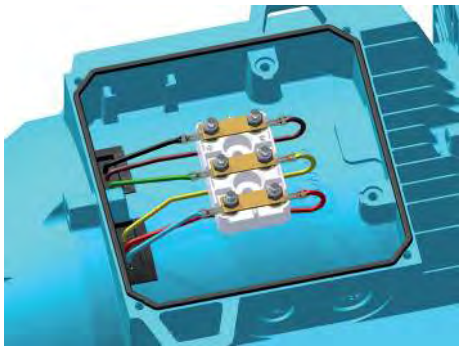

Terminal board for motor size 132

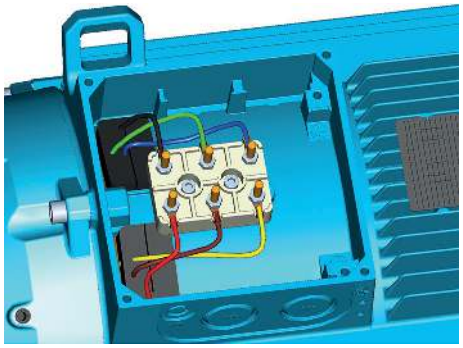

Terminal board for motor sizes 160 to 180 in G-generation

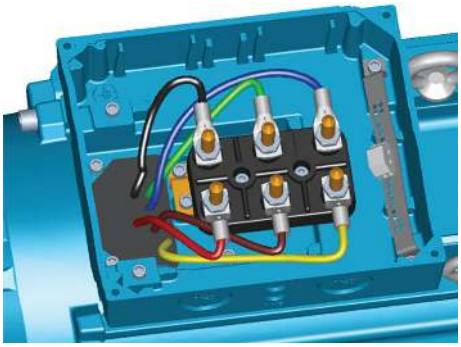

Terminal board for motor sizes 160 to 200 in L-generation

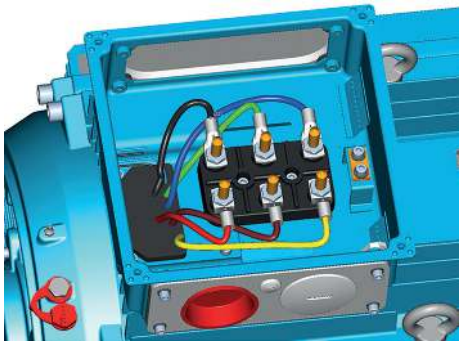

Terminal board for motor sizes 200 to 280 in G-generation

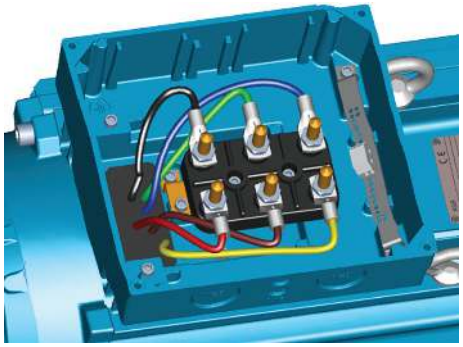

Terminal board for motor sizes 225 to 280 in L-generation

The terminal block is provided with six terminals for connecting Cu-cable.
The terminals are marked in accordance with IEC 60034-8.

Connection openings

Motor size	Opening	Metric cable entry	Method of connection	Terminal bolt size	Maximum connectable Cu-cable area, mm²
63	Knock-out opening	1 x M16 x 1.5 1 x Pg 11	Cable lug	M4	2.5
71-80	Knock-out opening	2 x (2 x M20)	Cable lug	M4	4
90-112	Knock-out opening	2 x (M25 + M20)	Screw terminal	M4	6
132 [1]	Knock-out opening	2 x (M25 + M20)	Cable lug	M5	10
132 [2]	Knock-out opening	2 x (M40 x M32 + M12)	Cable lug	M6	35
160-180	Knock-out opening	2 x (2 x M40) + M16	Cable lug	M6	35
200-250	2 x FL 13	1 x (2 x M40 + M16)	Cable lug	M10	70
280	2 x FL 21	1 x (2 x M63 + M16)	Cable lug	M10	70

[1]all types except [2]
[2]SM_

Dimension drawings
Foot-mounted aluminum motors, 63 - 112

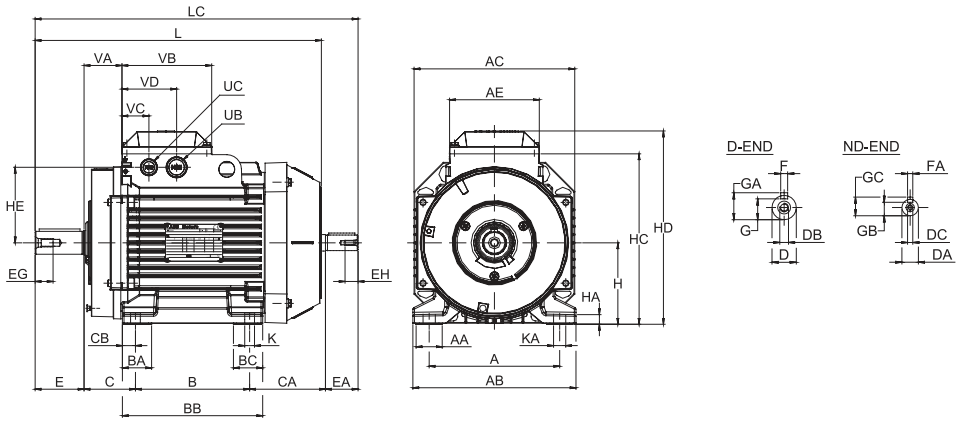

Foot-mounted motor; IM B3 (IM 1001), IM 1002

IM B3 (IM 1001), IM 1002

Motor size	A	AA	AB	AC	AE	B	BA	BB	BC	C	CA	CB	D	DA	DB	DC	E	EA	EG	EH	F
63	100	25	120	120	85	80	32	98	32	40	74	10	11	11	M4	M4	23	23	10	10	4
71	112	23	136	130	97	90	24.5	110	24.5	45	79.5	10	14	11	M5	M4	30	23	12.5	10	5
80 [1]	125	27	154	150	97	100	32	125	32	50	80.5	12.5	19	14	M6	M5	40	30	16	12.5	6
80 [2]	125	27	154	150	97	100	32	125	32	50	108	12.5	19	14	M6	M5	40	30	16	12.5	6
90 [3]	140	27	170	177	110	100	32	125	32	56	83.5	12.5	24	14	M8	M5	50	30	19	12.5	8
90 [4]	140	27	170	177	110	125	32	150	32	56	83.5	12.5	24	14	M8	M5	50	30	19	12.5	8
90 [5]	140	27	170	177	110	125	32	150	32	56	105.5	12.5	24	14	M8	M5	50	30	19	12.5	8
100 [6]	160	32	200	197	110	140	36	172	36	63	93	16	28	19	M10	M6	60	40	22	16	8
100 [7]	160	32	200	197	110	140	36	172	36	63	115	16	28	19	M10	M6	60	40	22	16	8
100 [8]	160	32	200	197	110	140	36	172	36	63	136	16	28	19	M10	M6	60	40	22	16	8
112 [9]	190	32	230	197	110	140	36	172	36	70	136	16	28	19	M10	M6	60	40	22	16	8
112 [10]	190	41	222	221	160	140	31	168	31	70	123	14	28	19	M10	M8	60	40	22	19	8
112 [11]	190	41	222	221	160	140	31	168	31	70	143	14	28	19	M10	M8	60	40	22	19	8

Motor size	FA	G	GA	GB	GC	H	HA	HC	HD	HE	K	KA	L	LC	UB	UC	VA	VB	VC	VD
63	4	8.5	12.5	8.5	12.5	63	7	120	151	50	7	11	214	237	pg11	M16x1.5	31	92	30.5	61.5
71	4	11	16	8.5	12.5	71	9	151	180	63.5	7	11	240	267	M20	M20	35			
80 [1]	5	15.5	21.5	11	16	80	10	164.5	193.5	68	10	14	265.5	300.5	M20	M20	37.5	97	30.5	66.5
80 [2]	5	15.5	21.5	11	16	80	10	164.5	193.5	68	10	14	293	328	M20	M20	37.5	97	30.5	66.5
90 [3]	5	20	27	11	16	90	10	189	217	82.5	10	14	284.5	319.5	M25	M20	43.5	110	33	67
90 [4]	5	20	27	11	16	90	10	189	217	82.5	10	14	309.5	344.5	M25	M20	43.5	110	33	67
90 [5]	5	20	27	11	16	90	10	189	217	82.5	10	14	331.5	366.5	M25	M20	43.5	110	33	67
100 [6]	6	24	31	15.5	21.5	100	12	209	237	92.5	12	15	351	396	M25	M20	46.5	110	33	67
100 [7]	6	24	31	15.5	21.5	100	12	209	237	92.5	12	15	373	418	M25	M20	46.5	110	33	67
100 [8]	6	24	31	15.5	21.5	100	12	209	237	92.5	12	15	393	436	M25	M20	46.5	110	33	67
112 [9]	6	24	31	15.5	21.5	112	12	221	249	92.5	12	15	393	436	M25	M20	46.5	110	33	67
112 [10]	6	24	31	15.5	21.5	112	12	226	258	92	12	15	390	433	M25	M20	60	160	80	120
112 [11]	6	24	31	15.5	21.5	112	12	226	258	92	12	15	410	453	M25	M20	60	160	80	120

Tolerances	
A, B	±0.8
D, DA	ISO j6
F, FA	ISO h9
H	+0 -0.5
N	ISO j6
C, CA	±0.8

Footnotes

[1] **IE2:** B-2, C-2, A-4, D-4, A-6, B-6, A-8, B-8, C-8
IE3: B-2, C-2
[2] **IE3:** E-4
[3] **IE2:** S-8
[4] **IE2:** L-2, L-8, LB-2, LB-4, LB-6, LB-8
IE3: L-2, LB-2, LB-4, LB-6
[5] **IE2:** LD-4, LD-6
IE3: LD-4, LD-6
[6] **IE2:** LB-2, LC-4, LC-6, LA-8, LB-8, LC-8
IE3: LC-4
[7] **IE2:** LD-4
[8] **IE3:** LB-2, LC-6, LD-4
[9] **IE2:** MB-2, MB-4, MB-6, MB-8, M-8
[10] **IE3:** MB-2
[11] **IE3:** MB-4

Dimension drawings
Flange-mounted aluminum motors, 63 - 112

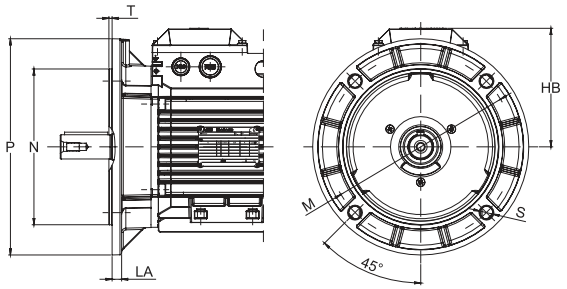

Flange-mounted motor, large flange; IM B5 (IM 3001), IM 3002

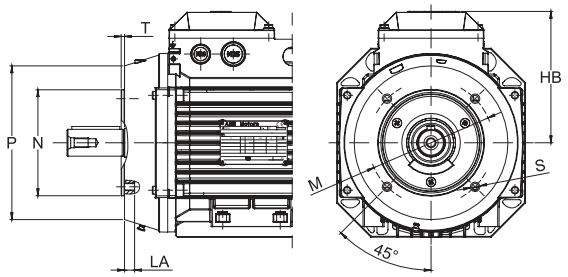

Flange-mounted motor, small flange; IM B14 (IM 3601)

IM B5 (IM3001), IM 3002

Motor size	HB	LA	M	N	P	S	T
63	103	10	100	80	120	7	3
71	109	9.5	130	110	160	10	3.5
80 [1]	113.5	10	165	130	200	12	3.5
80 [2]	113.5	10	165	130	200	12	3.5
90 [3]	127	10	165	130	200	12	3.5
90 [4]	127	10	165	130	200	12	3.5
90 [5]	127	10	165	130	200	12	3.5
100 [6]	137	11	215	180	250	15	4
100 [7]	137	11	215	180	250	15	4
100 [8]	137	11	215	180	250	15	4
112 [9]	137	11	215	180	250	15	4
112 [10]	146	11	215	180	250	15	4
112[11]	137	11	215	180	250	15	4

IM B14 (IM 3601), IM 3602

Motor size	HB	LA	M	N	P	S	T
63	103	10	75	60	90	M5	2.5
71	109	11	85	70	105	M6	3
80 [1]	113.5	11	100	80	120	M6	3
80 [2]	113.5	11	100	80	120	M6	3
90 [3]	127	13	115	95	140	M8	3
90[4]	127	13	115	95	140	M8	3
90 [5]	127	13	115	95	140	M8	3
100 [6]	137	14	130	110	160	M8	3.5
100 [7]	137	14	130	110	160	M8	3.5
100 [8]	137	14	130	110	160	M8	3.5
112 [9]	137	14	130	110	160	M8	3.5
112 [10]	146	20	130	110	160	M8	3.5
112 [11]	137	14	130	110	160	M8	3.5

Tolerances	
A, B	±0.8
D, DA	ISO j6
F, FA	ISO h9
H	+0 -0.5
N	ISO j6
C, CA	±0.8

Footnotes

[1] **IE2:** B-2, C-2, A-4, D-4, A-6, B-6, A-8, B-8, C-8
IE3: B-2, C-2
[2] **IE3:** E-4
[3] **IE2:** S-8
[4] **IE2:** L-2, L-8, LB-2, LB-4, LB-6, LB-8
IE3: L-2, LB-2, LB-4, LB-6
[5] **IE2:** LD-4, LD-6
IE3: LD-4, LD-6
[6] **IE2:** LB-2, LC-4, LC-6, LA-8, LB-8, LC-8
IE3LC-4
[7] **IE2:** LD-4
[8] **IE3:** LB-2, LC-6, LD-4
[9] **IE2:** MB-2, MB-4, MB-6, MB-8, M-8
[10] **IE3:** MB-2
[11] **IE3:** MB-4

Dimension drawings
Foot- and flange-mounted aluminum motors, 63 - 112

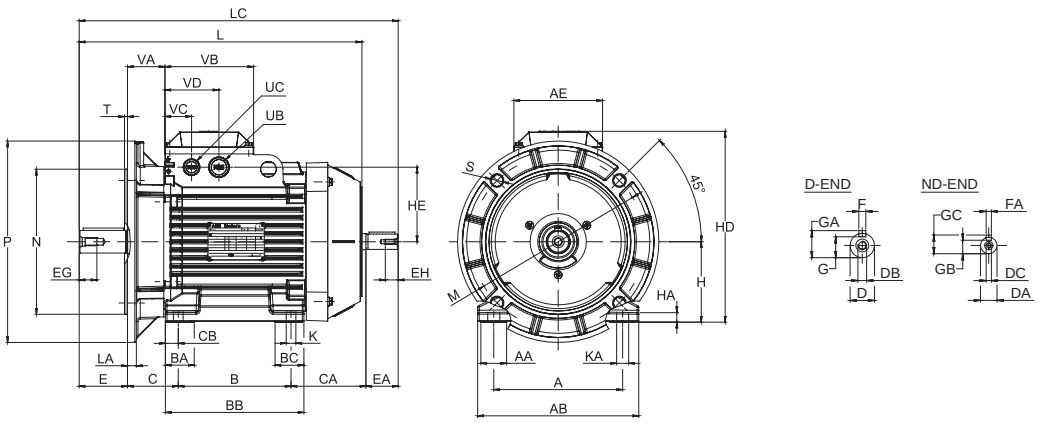

Foot- and flange-mounted motor; IM B35 (IM 2001), IM 2002, large flange

IM B35 (IM 2001), IM 2002; IM B34 (IM 2101), IM 2102

Motor size	A	AA	AB	AC	AE	B	BA	BB	BC	C	CA	CB	D	DA	DB	DC	E	EA	EG	EH	F
63	100	25	120	120	85	80	32	98	32	40	74	10	11	11	M4	M4	23	23	10	10	4
71	112	23	136	130	97	90	24.5	110	24.5	45	79.5	10	14	11	M5	M4	30	23	12.5	10	5
80[1]	125	27	154	150	97	100	32	125	32	50	80.5	12.5	19	14	M6	M5	40	30	16	12.5	6
80[2]	125	27	154	150	97	100	32	125	32	50	108	12.5	19	14	M6	M5	40	30	16	12.5	6
90[3]	140	27	170	177	110	100	32	125	32	56	83.5	12.5	24	14	M8	M5	50	30	19	12.5	8
90[4]	140	27	170	177	110	125	32	150	32	56	83.5	12.5	24	14	M8	M5	50	30	19	12.5	8
90[5]	140	27	170	177	110	125	32	150	32	56	105.5	12.5	24	14	M8	M5	50	30	19	12.5	8
100[6]	160	32	200	197	110	140	36	172	36	63	93	16	28	19	M10	M6	60	40	22	16	8
100[7]	160	32	200	197	110	140	36	172	36	63	115	16	28	19	M10	M6	60	40	22	16	8
100[8]	160	32	200	197	110	140	36	172	36	63	136	16	28	19	M10	M6	60	40	22	16	8
112[9]	190	32	230	197	110	140	36	172	36	70	136	16	28	19	M10	M6	60	40	22	16	8
112[10]	190	41	222	221	160	140	31	168	31	70	123	14	28	19	M10	M8	60	40	22	19	8
112 [11]	190	41	222	221	160	140	31	168	31	70	143	14	28	19	M10	M8	60	40	22	19	8

Motor size	FA	G	GA	GB	GC	H	HA	HC	HD	HE	K	KA	L	LC	UB	UC	VA	VB	VC	VD
63	4	8.5	12.5	8.5	12.5	63	7	120	151	50	7	11	214	237	pg11	M16x1.5	31	92	30.5	61.5
71	4	11	16	8.5	12.5	71	9	151	180	63.5	7	11	240	267	M20	M20	35			
80[1]	5	15.5	21.5	11	16	80	10	164.5	193.5	68	10	14	265.5	300.5	M20	M20	37.5	97	30.5	66.5
80[2]	5	15.5	21.5	11	16	80	10	164.5	193.5	68	10	14	293	328	M20	M20	37.5	97	30.5	66.5
90[3]	5	20	27	11	16	90	10	189	217	82.5	10	14	284.5	319.5	M25	M20	43.5	110	33	67
90[4]	5	20	27	11	16	90	10	189	217	82.5	10	14	309.5	344.5	M25	M20	43.5	110	33	67
90[5]	5	20	27	11	16	90	10	189	217	82.5	10	14	331.5	366.5	M25	M20	43.5	110	33	67
100[6]	6	24	31	15.5	21.5	100	12	209	237	92.5	12	15	351	396	M25	M20	46.5	110	33	67
100[7]	6	24	31	15.5	21.5	100	12	209	237	92.5	12	15	373	418	M25	M20	46.5	110	33	67
100[8]	6	24	31	15.5	21.5	100	12	209	237	92.5	12	15	393	436	M25	M20	46.5	110	33	67
112[9]	6	24	31	15.5	21.5	112	12	221	249	92.5	12	15	393	436	M25	M20	46.5	110	33	67
112[10]	6	24	31	15.5	21.5	112	12	226	258	92	12	15	390	433	M25	M20	60	160	80	120
112[11]	6	24	31	15.5	21.5	112	12	226	258	92	12	15	410	453	M25	M20	60	160	80	120

Tolerances	
A, B	± 0.8
D, DA	ISO j6
F, FA	ISO h9
H	+0 -0.5
N	ISO j6
C, CA	± 0.8

Footnotes

[1] **IE2:** B-2, C-2, A-4, D-4, A-6, B-6, A-8, B-8, C-8
IE3: B-2, C-2
[2] **IE3:** E-4
[3] **IE2:** S-8
[4] **IE2:** L-2, L-8, LB-2, LB-4, LB-6, LB-8
IE3: L-2, LB-2, LB-4, LB-6
[5] **IE2:** LD-4, LD-6
IE3: LD-4, LD-6
[6] **IE2:** LB-2, LC-4, LC-6, LA-8, LB-8, LC-8
IE3: LC-4
[7] **IE2:** LD-4
[8] **IE3:** LB-2, LC-6, LD-4
[9] **IE2:** MB-2, MB-4, MB-6, MB-8, M-8
[10] **IE3:** MB-2
[11] **IE3:** MB-4

Dimension drawings
Foot- and flange-mounted aluminum motors, 63 - 112

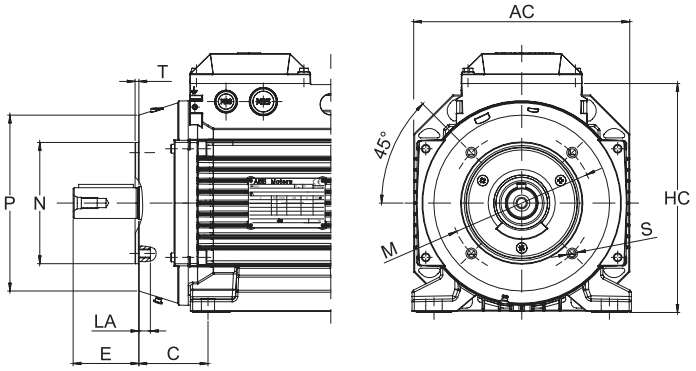

IM B35 (IM 2001), IM 2002

Motor size	HB	LA	M	N	P	S	T
63	103	10	100	80	120	7	3
71	109	9.5	130	110	160	10	3.5
80[1)]	113.5	10	165	130	200	12	3.5
80[2)]	113.5	10	165	130	200	12	3.5
90 [3)]3)	127	10	165	130	200	12	3.5
90[4)]	127	10	165	130	200	12	3.5
90[5)]	127	10	165	130	200	12	3.5
100[6)]	137	11	215	180	250	15	4
100[7)]	137	11	215	180	250	15	4
100[8)]	137	11	215	180	250	15	4
112[9)]	137	11	215	180	250	15	4
112[10)]	146	11	215	180	250	15	4
112[11)]	137	11	215	180	250	15	4

IM B34 (IM 2101), IM 2102

Motor size	HB	LA	M	N	P	S	T
63	103	10	65	50	80	M5	2.5
71	109	11	85	70	105	M6	3
80[1)]	113.5	11	100	80	120	M6	3
80[2)]	113.5	11	100	80	120	M6	3
90[3)]	127	13	115	95	140	M8	3
90[4)]	127	13	115	95	140	M8	3
90[5)]	127	13	115	95	140	M8	3
100[6)]	137	14	130	110	160	M8	3.5
100[7)]	137	14	130	110	160	M8	3.5
100[8)]	137	14	130	110	160	M8	3.5
112[9)]	137	14	130	110	160	M8	3.5
112[10)]	146	20	130	110	160	M8	3.5
112[11)]	137	14	130	110	160	M8	3.5

Tolerances	
A, B	± 0.8
D, DA	ISO j6
F, FA	ISO h9
H	+0 -0.5
N	ISO j6
C, CA	± 0.8

Footnotes

[1)] **IE2:** B-2, C-2, A-4, D-4, A-6, B-6, A-8, B-8, C-8
IE3: B-2, C-2
[2)] **IE3:** E-4
[3)] **IE2:** S-8
[4)] **IE2:** L-2, L-8, LB-2, LB-4, LB-6, LB-8
IE3: L-2, LB-2, LB-4, LB-6
[5)] **IE2:** LD-4, LD-6
IE3: LD-4, LD-6
[6)] **IE2:** LB-2, LC-4, LC-6, LA-8, LB-8, LC-8
IE3: LC-4
[7)] **IE2:** LD-4
[8)] **IE3:** LB-2, LC-6, LD-4
[9)] **IE2:** MB-2, MB-4, MB-6, MB-8, M-8
[10)] **IE3:** MB-2
[11)]**IE3:** MB-4

Dimension drawings
Special design aluminum motors with two-piece flanges, 71 - 132

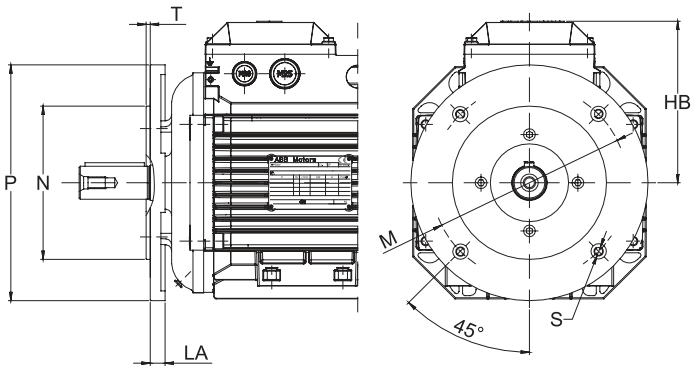

		Flange dimensions							Variant code	
Motor size	IEC flange	HB	P	M	N	LA	S	T	FF	FT
71	FT85	105	105	85	70	7.5	M6	2.5	-	218
	FF100/FT100	105	120	100	80	7.5	M6	3	220	219
	FF115/FT115	105	140	115	95	9.5	M8	3	223	224
	FF130/FT130	105	160	130	110	9.5	M8	3.5	226	227
	FF165/FT165	105	200	165	130	10.5	M10	3.5	233	234
80	FT85	110	105	85	70	7.5	M6	2.5	-	218
	FF100/FT100	110	120	100	80	7.5	M6	3	220	219
	FF115/FT115	110	140	115	95	9.5	M8	3	223	224
	FF130/FT130	110	160	130	110	9.5	M8	3.5	226	227
	FF165/FT165	110	200	165	130	10.5	M10	3.5	233	234
90	FT85	127	105	85	70	7.5	M6	2.5	-	218
	FF100/FT100	127	120	100	80	7.5	M6	3	220	219
	FF115/FT115	127	140	115	95	9.5	M8	3	223	224
	FF130/FT130	127	160	130	110	9.5	M8	3.5	226	227
	FF165/FT165	127	200	165	130	10.5	M10	3.5	233	234
100	FF130/FT130	137	160	130	110	9.5	M8	3.5	226	227
	FF165/FT165	137	200	165	130	10.5	M10	3.5	233	234
	FF215/FT215	137	250	215	180	12.5	M12	4	243	244
112	FF130/FT130	137	160	130	110	9.5	M8	3.5	226	227
	FF165/FT165	137	200	165	130	10.5	M10	3.5	233	234
	FF215/FT215	137	250	215	180	12.5	M12	4	243	244
132	FF215/FT215	164	250	215	180	12.5	M12	4	243	244
	FF265/FT265	164	300	265	230	16	M12	4	253	254

Tolerances	
N	ISO j6

Dimension drawings
Foot- and flange-mounted aluminum motors, 132

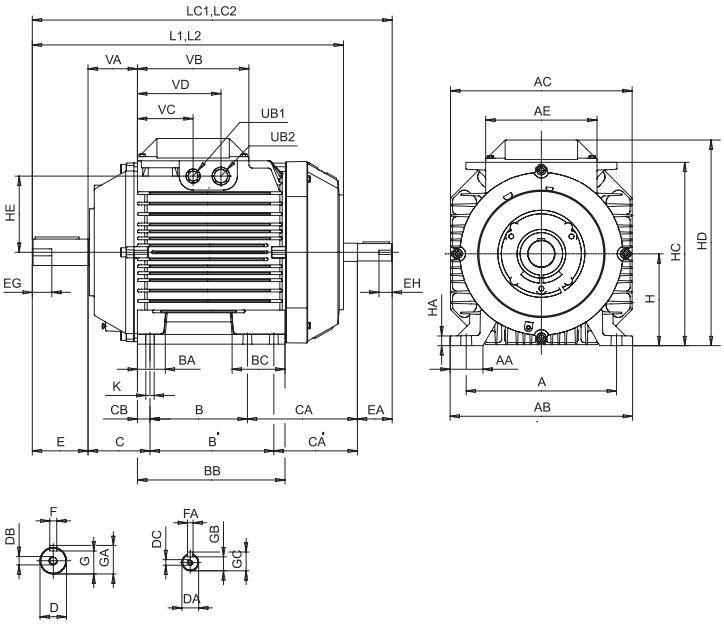

Foot-mounted motor; IM B3 (IM 1001), IM 1002

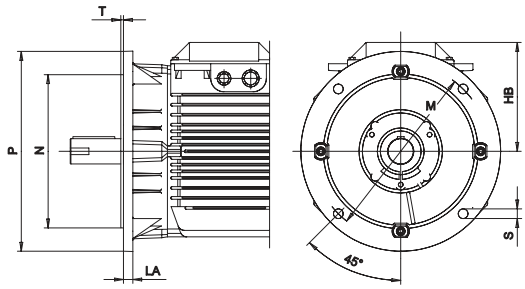

Flange-mounted motor, large flange; IM B5 (IM 3001), IM 3002

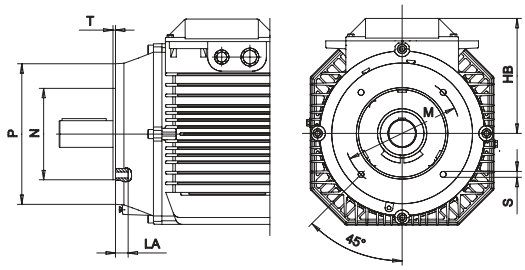

Flange-mounted motor, small flange; IM B14 (IM 3601), IM 3602

IM B3 (IM 1001), IM 1002

Motor size	A	AA	AB	AC	AE	B	B'	BA	BB	BC	C	CA	CA'	CB	D	DA	DB	DC	E	EA	EG	EH	F
132[1)]	216	47	262	261	160	140	178	40	212	76	89	158	120	18	38	24	M12	M8	80	50	28	19	10
132 [2)]	216	47	262	261	160	140	178	40	212	76	89	178	140	18	38	24	M12	M8	80	50	28	19	10
132 SM_	216	47	262	261	160	140	178	40	212	76	89	261	223	18	38	24	M12	M8	80	50	28	19	10

Motor size	FA	G	GA	GB	GC	H	HA	HC	HD	HE	K	KA	L	LC	UB1	UB2	UD	VA	VB	VC	VD	VE
132[1)]	8	33	41	20	27	132	14	263.5	295.5	109.5	12	15	447	517	M20	M25	-	71	160	80	120	
132[2)]	8	33	41	20	27	132	14	263.5	295.5	109.5	12	15	487	537	M20	M25	-	71	160	80	120	
132 SM_	8	33	41	20	27	132	14	287	321	123.5	12	15	550	620	M40	M32	M12	71	160	42	102	136

IM B5 (IM 3001), IM 3002

Motor size	HB	LA	M	N	P	S	T
132[1)]	163.5	14	265	230	300	14.5	4
132[2)]	163.5	14	265	230	300	14.5	4
132 SM_	189	14	265	230	300	14.5	4

IM B14 (IM 3601), 3602

Motor size	HB	LA	M	N	P	S	T
132[1)]	163.5	14.5	165	130	200	M10	3.5
132[2)]	163.5	14.5	165	130	200	M10	3.5
132 SM_	189	14.5	165	130	200	M10	3.5

Tolerances	
A, B	ISO js14
C, CA	+2 -2
D	ISO k6
DA	ISO j6
F, FA	ISO h9
H	+0 -0.5
N	ISO j6

Footnotes

[1)] **IE2:** SB-2, M-4, MA-4, MBA-4
IE3: M-4, MA-4, S-6
[2)] **IE2**: SC-2, MC-6
IE3: SB-2, SC-2, MA-6, MC-6

Dimension drawings
Foot- and flange-mounted aluminum motors, 132

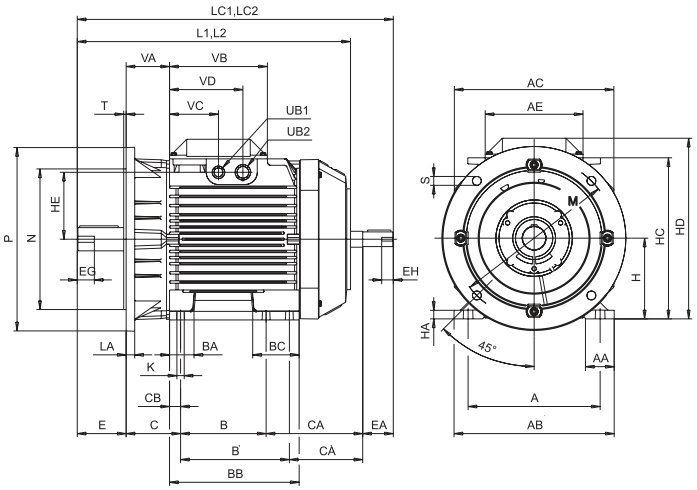

Foot- and flange-mounted motor; IM B35 (IM 2001), IM 2002, large flange

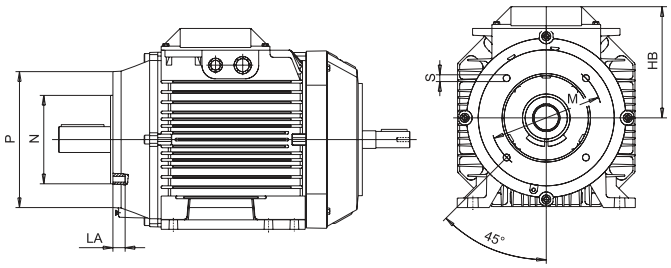

Foot- and flange-mounted motor; IM B34 (IM 2101), IM 2102, small flange

IM B3 (IM 2001), IM 2002

Motor size	A	AA	AB	AC	AE	B	B'	BA	BB	BC	C	CA	CA'	CB	D	DA	DB	DC	E	EA	EG	EH	F
132 1)	216	47	262	261	160	140	178	40	212	76	89	158	120	18	38	24	M12	M8	80	50	28	19	10
132 2)	216	47	262	261	160	140	178	40	212	76	89	178	140	18	38	24	M12	M8	80	50	28	19	10
132 SM_	216	47	262	261	160	140	178	40	212	76	89	261	223	18	38	24	M12	M8	80	50	28	19	10

Motor size	FA	G	GA	GB	GC	H	HA	HC	HD	HE	K	KA	L	LC	UB1	UB2	UD	VA	VB	VC	VD	VE
132 1)	8	33	41	20	27	132	14	263.5	295.5	109.5	12	15	447	517	M20	M25	-	71	160	80	120	
132 2)	8	33	41	20	27	132	14	263.5	295.5	109.5	12	15	487	537	M20	M25	-	71	160	80	120	
132 SM_	8	33	41	20	27	132	14	287	321	123.5	12	15	550	620	M40	M32	M12	71	160	42	102	136

IM B35 (IM 2001)

Motor size	HB	LA	M	N	P	S	T
132[1)]	163.5	14	265	230	300	14.5	4
132[2)]	163.5	14	265	230	300	14.5	4
132 SM_	189	14	265	230	300	14.5	4

IM B34 (IM 2101)

Motor size	HB	LA	M	N	P	S	T
132[1)]	163.5	14.5	165	130	200	M10	3.5
132[2)]	163.5	14.5	165	130	200	M10	3.5
132 SM_	189	14.5	165	130	200	M10	3.5

Tolerances	
A, B	ISO js14
C, CA	+2 -2
D	ISO k6
DA	ISO j6
F, FA	ISO h9
H	+0 -0.5
N	ISO j6

Footnotes

[1)] **IE2:** SB-2, M-4, MA-4, MBA-4
IE3: M-4, MA-4, S-6
[2)] **IE2:** SC-2, MC-6
IE3: SB-2, SC-2, MA-6, MC-6

Dimension drawings
Foot-mounted aluminum motors, 160 - 180

Foot-mounted motor; IM B3 (IM 1001), IM 1002

IM B3 (IM 1001), IM 1002

Motor size	A	AA	AB	AC	AE	B	B'	BA	BB	C	CA	CA'	CB	D	DA	DB	DC	E	EA
160[1]	254	54	310	323	180	210	254	84	294	108	172	128	20	42	32	M16	M12	110	80
160[2]	254	54	310	323	180	210	254	84	294	108	269	225	20	42	32	M16	M12	110	80
180	279	68	341	354	180	241	279	78	319	121	263	225	20	48	32	M16	M12	110	80
180[4]	279	66	340	311	180	241	279	78	319	121	238	200	20	48	32	M16	M12	110	80

Motor size	EG	EH	F	FA	G	GA	GB	GC	H	HA	HC	HD	HE	K	L	LC	UB1[3]	UB2[3]	VA
160[1]	36	28	12	10	37	45	27	35	160	20	342	370	139	15	584	680	2*M40	M16	88.5
160[2]	36	28	12	10	37	45	27	35	160	20	342	370	139	15	681	777	2*M40	M16	88.5
180	36	28	14	10	42.5	51.5	27	35	180	20	369	405	154	15	726	815	2*M40	M16	88.5
180[4]	36	28	14	10	42.5	51.5	27	35	180	20	-	390	139	14.5	681	777	2*M40	M16	88.5

Motor size	VB	VC	VD	VE
160[1]	180	80	135.5	43
160[2]	180	80	135.5	43
180	180	80	135.5	43
180[4]	180	80	135.5	43

Tolerances	
A, B	ISO js14
C, CA	± 0.8
D, DA	ISO k6
F, FA	ISO h9
H	+0 -0.5

Footnotes

M3AA IE2:
[1] MLA-2, MLB-2, MLC-2, MLA-4, MLA-6, MLA-8 and MLB 8-poles
[2] MLD-2, MLE-2, MLB-4, MLC-4, MLD-4, MLB-6, MLC-6 and MLC-8 poles
M3AA IE3:
[1] MLA-2
[2] MLB-2, MLC-2, all 4- and 6-poles
[3] Knock-out openings
[4] L generation

Dimension drawings
Flange-mounted aluminum motors, 160 - 180

Flange-mounted motor; IM B5 (IM 3001), IM 3002

IM B5 (IM 3001), IM 3002

Motor size	AC	AE	D	DA	DB	DC	E[4]	EA	EG	EH	F	FA	G	GA	GB	GC	HB
160[1]	323	180	42	32	M16	M12	110	80	36	28	12	10	37	45	27	35	210
160[2]	323	180	42	32	M16	M12	110	80	36	28	12	10	37	45	27	35	210
180	354	180	48	32	M16	M12	110	80	36	28	14	10	42.5	51.5	27	35	225
180[5]	311	180	48	32	M16	M12	110	80	36	28	14	10	42.5	51.5	27	35	210

Motor size	HE	L	LA	LB	LC	M	N	P	S	T	UB1[3]	UB2[3]	VA	VB	VC	VD	VE
160[1]	139	681	20	474	680	300	250	350	19	5	2*M40	M16	88.5	180	43	80	135.5
160[2]	139	681	20	571	777	300	250	350	19	5	2*M40	M16	88.5	180	43	80	135.5
180	154	726	15	616	815	300	250	350	19	5	2*M40	M16	88.5	180	43	80	135.5
180[5]	139	681	18	571	777	300	250	350	19	5	2*M40	M16	88.5	180	43	80	135.5

Tolerances	
D, DA	ISO k6
F, FA	ISO h9
N	ISO j6

Footnotes

M3AA IE2:

[1] MLA-2, MLB-2, MLC-2, MLA-4, MLA-6, MLA-8 and MLB 8-poles

[2] MLD-2, MLE-2, MLB-4, MLC-4, MLD-4, MLB-6, MLC-6 and MLC-8 poles

M3AA IE3:

[1] MLA-2

[2] MLB-2, MLC-2, all 4- and 6-poles

[3] Knock-out openings

[4] Shoulder of shaft extension and contact surface of flange are in the same plane.

[5] L generation

Dimension drawings
Foot- and flange-mounted aluminum motors, 160 - 180

IM B35 (IM 2001), IM 2002

Motor size	A	AA	AB	AC	AE	B	B'	BA	BB	C	CA	CA'	CB	D	DA	DB	DC	E[4]	EA
160[1]	254	54	310	323	180	210	254	84	294	108	172	128	20	42	32	M16	M12	110	80
160[2]	254	54	310	323	180	210	254	84	294	108	269	225	20	42	32	M16	M12	110	80
180	279	68	341	354	180	241	279	78	319	121	263	225	20	48	32	M16	M12	110	80
180[5]	279	66	340	311	180	241	279	78	319	121	238	200	20	48	32	M16	M12	110	80

Motor size	EG	EH	F	FA	G	GA	GB	GC	H	HA	HC	HD	HE	K	L	LA	LB	LC	M
160[1]	36	28	12	10	37	45	27	35	160	20	342	370	139	14.5	584	20	474	680	300
160[2]	36	28	12	10	37	45	27	35	160	20	342	370	139	14.5	681	20	571	777	300
180	36	28	14	10	42.5	51.5	27	35	180	20	369	405	154	14.5	726	15	616	815	300
180[5]	36	28	14	10	42.5	51.5	27	35	180	20	-	390	139	14.5	681	18	571	777	300

Motor size	N	P	S	T	UB1[3]	UB2[3]	VA	VB	VC	VD	VE
160[1]	250	350	19	5	2*M40	M16	88.5	180	80	135.5	43
160[2]	250	350	19	5	2*M40	M16	88.5	180	80	135.5	43
180	250	350	19	5	2*M40	M16	88.5	180	80	135.5	43
180[5]	250	350	19	5	2*M40	M16	88.5	180	80	135.5	43

Tolerances	
A, B	ISO js14
C, CA	±8
D, DA	ISO k6
F, FA	ISO h9
H	+0 - 0.5
N	ISO j6

Footnotes

M3AA IE2:
[1] MLA-2, MLB-2, MLC-2, MLA-4, MLA-6, MLA-8 and MLB 8-poles
[2] MLD-2, MLE-2, MLB-4, MLC-4, MLD-4, MLB-6, MLC-6 and MLC-8 poles
M3AA IE3:
[1] MLA-2
[2] MLB-2, MLC-2, all 4- and 6-poles
[3] Knock-out openings
[4] Shoulder of shaft extenson and contact surface of flange are in same plane.
[5] L generation

Dimension drawings
Foot-mounted aluminum motors, 200 - 225

Foot-mounted motor; IM B3 (IM 1001), IM 1002

IM B3 (IM 1001), IM 1002

Motor size	Poles	A	AA	AB	AC	AE	B	B'	BA	BB	C	CA	CA'	CB	D	DA	DB	DC	E	EA
200		318	64	380	386	243	267	305	112	365	133	314	276	30	55	45	M20	M16	110	110
225	2	356	69	418	425	243	286	311	102	365	149	314	289	24.5	55	55	M20	M20	110	110
225	4-8	356	69	418	425	243	286	311	102	365	149	314	289	24.5	60	55	M20	M20	140	110

Motor size	Poles	EG	EH	F	FA	G	GA	GB	GC	H	HA	HD[2]	HD[3]	HE[2]	HE[3]	K	L	LC	UB[1]
200		42	36	16	14	49	59	39.5	48.5	200	25	500	532	224	239	18	821	934	2xFL13
225	2	42	42	16	14	49	59	49	59	225	25	547	579	244.5	260	18	850	971	2xFL13
225	4-8	42	42	18	16	53	64	49	59	225	25	547	579	244.5	260	18	880	1001	2xFL13

Motor size	Poles	VA	VB	VC[2]	VC[3]	VD[2]	VD[3]	VE[2]	VE[2]
200		101	243	112	77	179	167	145	122
225	2	93.5	243	112	77	179	167	145	122
225	4-8	93.5	243	112	77	179	167	145	122

Tolerances	
A,B	ISO js14
C, CA	± 0.8
D 55-65	ISO m6
DA 45-55	ISO k6
F, FA	ISO h9
H	+0 -0.5

Footnotes

[1] Flange opening is provided with pipe flange FL 13, with tapped lead-in holes plugged with sealing plugs. Single- and two-speed motors: 2 x M40 + M16. Motors for 230VD 50Hz or 225 SMC-2, 225 SMD-2, 225 SMD-4 have pipe flange FL21 and 2 x M63 + M16

[2] For flange opening FL13: 2 x M40 + M16

[3] For extra large flange opening FL21: 2 x M63 + M16

Dimension drawings
Foot-mounted aluminum motors, 200 - 225, IE3 L generation

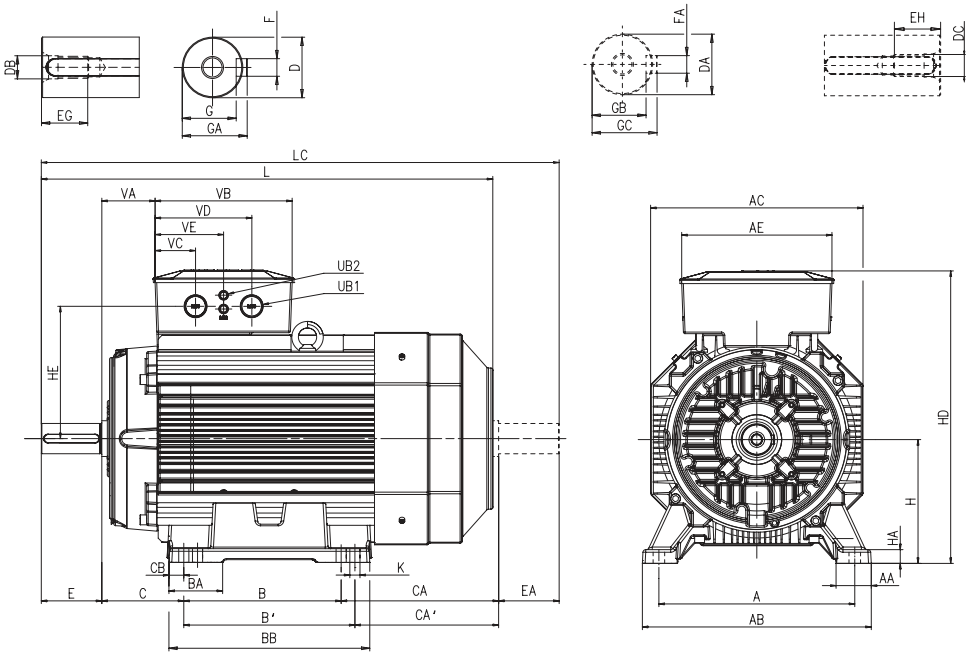

IM B3 (IM 1001), IM 1002

Motor size	Poles	Voltage code	A	AA	AB	AC	AE	B	B'	BA	BB	C	CA	CA'	CB	D	DA	DB	DC	E	EA
200			318	87	382	386	180	267	305	103	365	133	237	199	30	55	45	M20	M16	110	80
225	2	D, E	356	64	416	386	273	286	311	98	365	149	287	262	27	55	55	M20	M20	110	110
225	4-6	D, E	356	64	416	386	273	286	311	98	365	149	287	262	27	60	55	M20	M20	140	110
225	2	S	356	64	416	386	273	286	311	98	365	149	287	262	27	55	55	M20	M20	110	110
225	4-6	S	356	64	416	386	273	286	311	98	365	149	287	262	27	60	55	M20	M20	140	110

Motor size	Poles	Voltage code	EG	EH	F	FA	G	GA	GB	GC	H	HA	HD	HE	K	L	LC	UB1	UB2
200			42	36	16	14	49	59	39,5	48,5	200	25	425	154	15	726	815	2*M40	M16
225	2	D, E	42	42	16	14	49	59	49	59	225	25	531	241	18	821	942	2*M40	2*M16
225	4-6	D, E	42	42	18	16	53	64	49	59	225	25	531	241	18	851	972	2*M40	2*M16
225	2	S	42	42	16	14	49	59	49	59	225	25	531	241	18	821	942	2*M63	2*M16
225	4-6	S	42	42	18	16	53	64	49	59	225	25	531	241	18	851	972	2*M63	2*M16

Motor size	Poles	Voltage code	VA	VB	VC	VD	VE
200			88,5	180	80	135,5	43
225	2	D, E	97	249	73,5	175,5	124,5
225	4-6	D, E	97	249	73,5	175,5	124,5
225	2	S	97	249	73,5	175,5	124,5
225	4-6	S	97	249	73,5	175,5	124,5

Tolerances	
A,B	ISO js14
C, CA	± 0.8
D 55-65	ISO m6
DA 45-55	ISO k6
F, FA	ISO h9
H	+0 -0.5

Dimension drawings
Flange-mounted aluminum motors, 200 - 225

Flange-mounted motor; IM B5 (IM 3001), IM 3002 M3AA 200 M3AA 225

IM B5 (IM 3001), IM 3002

Motor size	Poles	AC	AE	D	DA	DB	DC	E[1]	EA	EG	EH	F	FA	G	GA	GB	GC	HB[3]	HB[4]	HE[3]
200		386	243	55	45	M20	M16	110	110	42	36	14	16	49	59	39.5	48.5	300	332	224
225	2	425	243	55	55	M20	M20	110	110	42	42	16	16	49	59	49	59	300	332	244
225	4-8	425	243	60	55	M20	M20	140	110	42	42	16	16	53	64	49	59	322	354	244

Motor size	Poles	HE[4]	L	LA	LB	LC	M	N	P	S	T	UB[2]	VA	VB	VC[3]	VC[4]	VD[3]	VD[4]	VE[3]	VE[4]
200		239	821	20	711	934	350	300	400	19	5	2xFL13	101	243	112	77	179	167	145	122
225	2	260	850	22	740	971	400	350	450	19	5	2xFL13	93.5	243	112	77	179	167	145	122
225	4-8	260	880	22	740	1001	400	350	450	19	5	2xFL13	93.5	243	112	77	179	167	145	122

Tolerances	
D 55-65	ISO m6
DA 45-55	ISO k6
F, FA	ISO h9
N	ISO j6

Footnotes

[1] Shoulder of shaft extension and contact surface of flange are in the same plane.
[2] Flange opening is provided with pipe flange FL 13, with tapped lead-in holes plugged with sealing plugs. Single- and two-speed motors: 2 x M40 + M16. Motors for 230VD 50Hz or 225 SMC-2, 225 SMD-2, 225 SMD-4 have pipe flange FL21 and 2 x M63 + M16
[3] For flange opening FL13: 2 x M40 + M16
[4] For extra large flange opening FL21: 2 x M63 + M16

Dimension drawings
Flange-mounted aluminum motors, 200 - 225, IE3 L generation

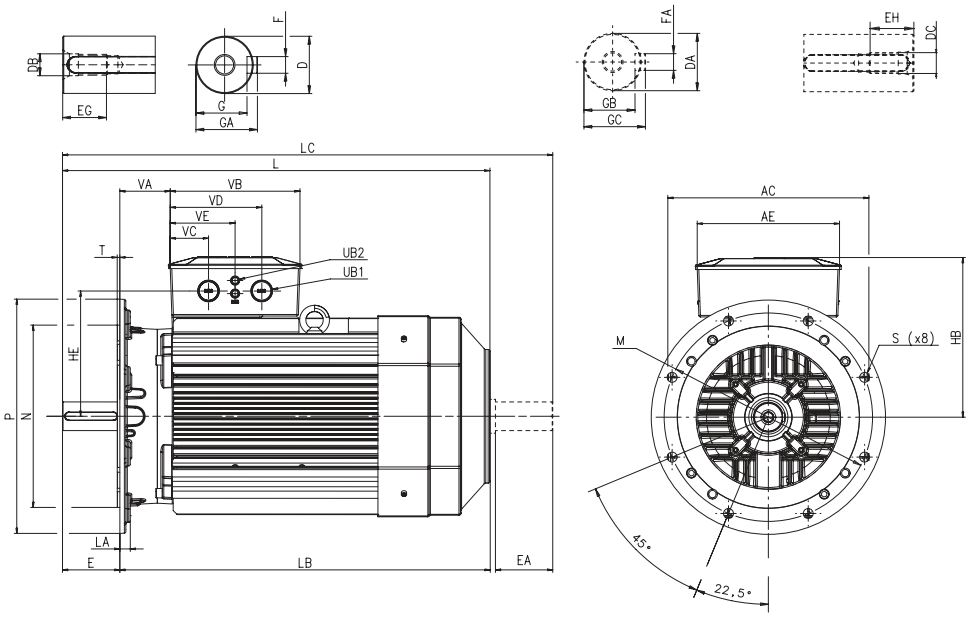

IM B5 (IM 3001), IM 3002

Motor size	Poles	Voltage code	AC	AE	D	DA	DB	DC	E	EA	EG	EH	F	FA	G	GA	GB	GC	HB
200			386	180	55	45	M20	M16	110	80	42	36	16	14	49	59	39,5	48,5	225
225	2	D, E	386	273	55	55	M20	M20	110	110	42	42	16	14	49	59	49	59	
225	4-6	D, E	386	273	60	55	M20	M20	140	110	42	42	18	16	53	64	49	59	
225	2	S	386	273	55	55	M20	M20	110	110	42	42	16	14	49	59	49	59	
225	4-6	S	386	273	60	55	M20	M20	140	110	42	42	18	16	53	64	49	59	

Motor size	Poles	Voltage code	HE	L	LA	LB	LC	M	N	P	S	T	UB1	UB2	VA	VB	VC	VD	VE
200			154	726	20	616	815	300	250	350	19	5	2*M40	M16	88,5	180	80	135,5	43
225	2	D, E	241	821	20	711	942	400	350	450	19	5	2*M40	2*M16	97	249	73,5	175,5	124,5
225	4-6	D, E	241	851	20	711	972	400	350	450	19	5	2*M40	2*M16	97	249	73,5	175,5	124,5
225	2	S	241	821	20	711	942	400	350	450	19	5	2*M63	2*M16	97	249	73,5	175,5	124,5
225	4-6	S	241	851	20	711	972	400	350	450	19	5	2*M63	2*M16	97	249	73,5	175,5	124,5

Tolerances	
D 55-65	ISO m6
DA 45-55	ISO k6
F, FA	ISO h9
N	ISO j6

Dimension drawings
Foot- and flange-mounted aluminum motors, 200 - 225

Foot- and lange-mounted motor; IM B35 (IM 2001), IM 2002 M3AA 200 M3AA 225

IM B35 (IM 2001), IM 2002

Motor size	Poles	A	AA	AB	AC	AE	B	B'	BA	BB	C	CA	CA'	CB	D	DA	DB	DC	E[1]	EA
200		318	64	380	386	243	267	305	112	365	133	314	276	30	55	45	M20	M16	110	110
225	2	356	69	418	425	243	286	311	102	365	149	314	289	24.5	55	55	M20	M20	110	110
225	4-8	356	69	418	425	243	286	311	102	365	149	314	289	24.5	60	55	M20	M20	140	110

Motor size	Poles	EG	EH	F	FA	G	GA	GB	GC	H	HA	HD[3]	HD[4]	HE[3]	HE[4]	K	L	LA	LB	LC
200		42	36	16	14	49	59	39.5	48.5	200	25	500	532	223	239	18	821	20	711	934
225	2	42	42	16	14	49	59	49	59	225	25	547	579	244	260	18	850	22	740	971
225	4-8	42	42	18	16	53	64	49	59	225	25	547	579	244	260	18	880	22	740	1001

Motor size	Poles	M	N	P	S	T	UB[2]	VA	VB	VC[3]	VC[4]	VD[3]	VD[4]	VE[3]	VE[4]
200		350	300	400	19	5	2xFL13	101	243	112	77	179	167	145	122
225	2	400	350	450	19	5	2xFL13	93.5	243	112	77	179	167	145	122
225	4-8	400	350	450	19	5	2xFL13	93.5	243	112	77	179	167	145	122

Tolerances

A, B	ISO js14
C, CA	± 0.8
D 55-75	ISO m6
DA 45-55	ISO k6
F, FA	ISO h9
H	+0 -0.5
N	ISO j6

[1] Shoulder of shaft extension and contact surface of flange are in the same plane.
[2] Flange opening is provided with pipe flange FL 13, with tapped lead-in holes plugged with sealing plugs. Single- and two-speed motors: 2 x M40 + M16. Motors for 230VD 50Hz or 225 SMC-2, 225 SMD-2, 225 SMD-4 have pipe flange FL21 and 2 x M63 + M16
[3] For flange opening FL13: 2 x M40 + M16
[4] For extra large flange opening FL21: 2 x M63 + M16

Dimension drawings

Foot- and flange-mounted aluminum motors, 200 - 225, IE3 L generation

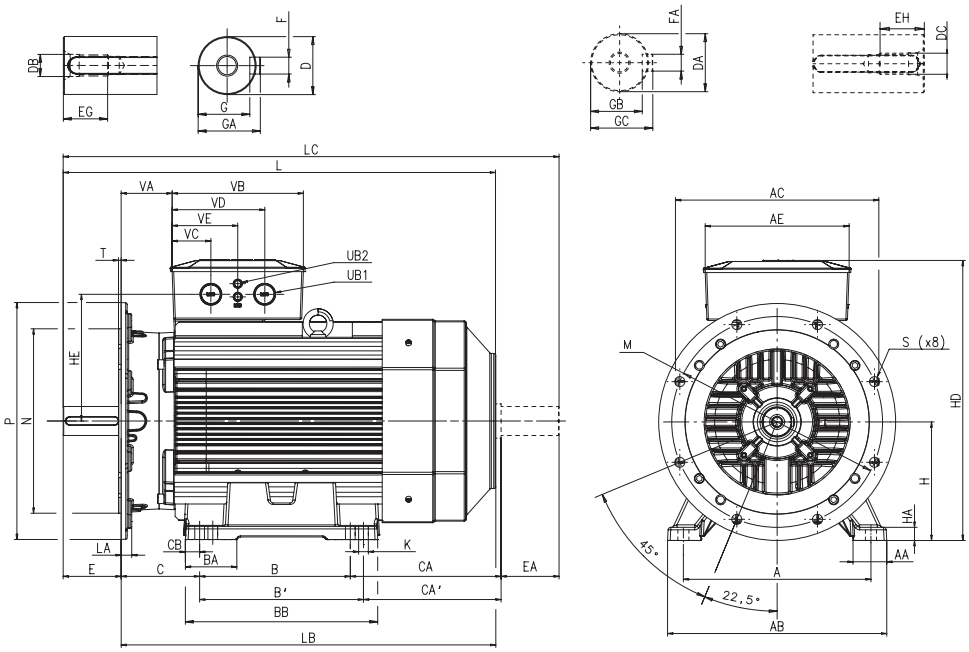

IMB35 (IM2001), IM 2002

Motor size	Poles	Voltage code	A	AA	AB	AC	AE	B	B'	BA	BB	C	CA	CA'	CB	D	DA	DB	DC	E	EA
200			318	87	382	386	180	267	305	103	365	133	237	199	30	55	45	M20	M16	110	80
225	2	D, E	356	64	416	386	273	286	311	98	365	149	287	262	27	55	55	M20	M20	110	110
225	4-6	D, E	356	64	416	386	273	286	311	98	365	149	287	262	27	60	55	M20	M20	140	110
225	2	S	356	64	416	386	273	286	311	98	365	149	287	262	27	55	55	M20	M20	110	110
225	4-6	S	356	64	416	386	273	286	311	98	365	149	287	262	27	60	55	M20	M20	140	110

Motor size	Poles	Voltage code	EG	EH	F	FA	G	GA	GB	GC	H	HA	HD	HE	K	L	LA	LB	LC
200			42	36	16	14	49	59	39,5	48,5	200	25	425	154	15	726	20	616	815
225	2	D, E	42	42	16	14	49	59	49	59	225	25	531	241	18	821	20	711	942
225	4-6	D, E	42	42	18	16	53	64	49	59	225	25	531	241	18	851	20	711	972
225	2	S	42	42	16	14	49	59	49	59	225	25	531	241	18	821	20	711	942
225	4-6	S	42	42	18	16	53	64	49	59	225	25	531	241	18	851	20	711	972

Motor size	Poles	Voltage code	M	N	P	S	T	UB1	UB2	VA	VB	VC	VD	VE
200			300	250	350	19	5	2*M40	M16	88,5	180	80	135,5	43
225	2	D, E	400	350	450	19	5	2*M40	2*M16	97	249	73,5	175,5	124,5
225	4-6	D, E	400	350	450	19	5	2*M40	2*M16	97	249	73,5	175,5	124,5
225	2	S	400	350	450	19	5	2*M63	2*M16	97	249	73,5	175,5	124,5
225	4-6	S	400	350	450	19	5	2*M63	2*M16	97	249	73,5	175,5	124,5

Tolerances	
A, B	ISO js14
C, CA	± 0.8
D 55-65	ISO m6
DA 45-55	ISO k6
F, FA	ISO h9
H	+0 -0.5
N	ISO j6

Dimension drawings
Foot-mounted aluminum motors, 250 - 280

Foot-mounted motor; IM B3 (IM 1001), IM 1002

IM B3 (IM 1001), IM 1002

Motor size	Poles	A	AA	AB	AC	AE	B	B'	BA	BB	C	CA	CA'	CB	D	DA	DB	DC	E	EA
250	2	406	78	473	471	243	311	349	106	409	168	281	243	40	60	55	M20	M20	140	110
250	4-8	406	78	473	471	243	311	349	106	409	168	281	243	30	65	55	M20	M20	140	110
280	2	457	102.5	522	471	243	368	419	92	489	190	202	151	37.5	65	55	M20	M20	140	110
280	4-8	457	102.5	522	471	243	368	419	92	489	190	202	151	37.5	75	55	M20	M20	140	110

Motor size	Poles	EG	EH	F	FA	G	GA	GB	GC	H	HA	HD[2]	HD[3]	HE[2]	HE[3]	K	L	LC	UB[1]	VA
250	2	42	42	18	16	53	64	49	59	250	30	594	627	268	284	22	884	1010	2xFL13	93.5
250	4-8	42	42	18	16	58	69	49	59	250	30	594	627	268	284	22	884	1010	2xFL13	93.5
280	2	42	42	18	16	58	69	49	59	280	40	-	657	-	284	24	884	1010	2xFL21	93.5
280	4-8	42	42	20	16	67.5	79.5	49	59	280	40	-	657	-	284	24	884	1010	2xFL21	93.5

Motor size	Poles	VB	VC[3]	VC[4]	VD[3]	VD[4]	VE[3]	VE[4]
250	2	243	112	77	179	167	145	122
250	4-8	243	112	77	179	167	145	122
280	2	243	-	77	-	167	-	122
280	4-8	243	-	77	-	167	-	122

Tolerances	
A, B	ISO js14
C, CA	± 0.8
D 55-75	ISO m6
DA 45-55	ISO k6
F, FA	ISO h9
H	+0 -0.5

Footnotes

[1] Flange opening is provided with pipe flange FL 13, with tapped lead-in holes plugged with sealing plugs. Single- and two-speed motors: 2 x M40 + M16. Motors for 230VD 50Hz or 250 SMC-2, 250 SMC-4 and all 280 have pipe flange FL21 and 2 x M63 + M16

[2] For flange opening FL13: 2 x M40 + M16

[3] For extra large flange opening FL21: 2 x M63 + M16

Dimension drawings
Foot-mounted aluminum motors, 250 - 280, IE3 L generation

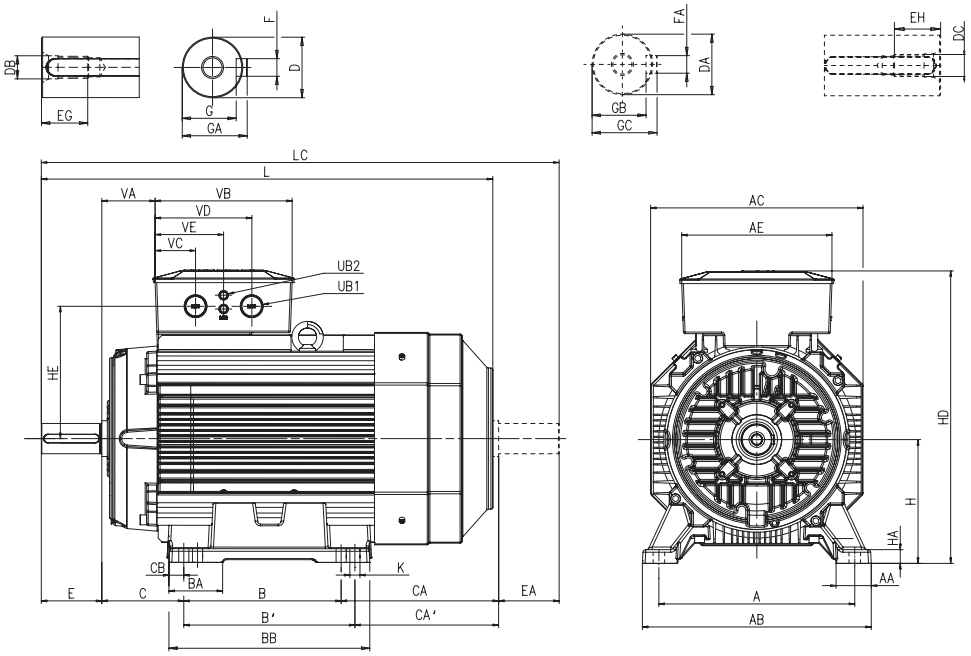

IM B3 (IM 1001), IM 1002

Motor size	Poles	Voltage code	A	AA	AB	AC	AE	B	B'	BA	BB	C	CA	CA'	CB	D	DA	DB	DC	E	EA
250	2	D, E	406	76	472	425	273	311	349	84	409	168	277	239	30	60	55	M20	M20	140	110
250	4-6	D, E	406	76	472	425	273	311	349	84	409	168	277	239	30	65	55	M20	M20	140	110
250	2	S	406	76	472	425	273	311	349	84	409	168	277	239	30	60	55	M20	M20	140	110
250	4-6	S	406	76	472	425	273	311	349	84	409	168	277	239	30	65	55	M20	M20	140	110
280	2	D, S, E	457	102	522	471	273	368	419	92	489	190	202	151	37	65	55	M20	M20	140	110
280	4-6	D, S, E	457	102	522	471	273	368	419	92	489	190	202	151	37	75	55	M20	M20	140	110

Motor size	Poles	Voltage code	EG	EH	F	FA	G	GA	GB	GC	H	HA	HD	HE	K	L	LC	UB1	UB2
250	2	D, E	42	42	18	16	53	64	49	59	250	40	578	241	22	880	1006	2*M40	2*M16
250	4-6	D, E	42	42	18	16	58	69	49	59	250	40	578	241	22	880	1006	2*M40	2*M16
250	2	S	42	42	18	16	53	64	49	59	250	40	578	241	22	880	1006	2*M63	2*M16
250	4-6	S	42	42	18	16	58	69	49	59	250	40	578	241	22	880	1006	2*M63	2*M16
280	2	D, S, E	42	42	18	16	58	69	49	59	280	40	631	241	24	884	1010	2*M63	2*M16
280	4-6	D, S, E	42	42	20	16	67,5	79,5	49	59	280	40	631	241	24	884	1010	2*M63	2*M16

Motor size	Poles	Voltage code	VA	VB	VC	VD	VE
250	2	D, E	90	249	73,5	175,5	124,5
250	4-6	D, E	90	249	73,5	175,5	124,5
250	2	S	90	249	73,5	175,5	124,5
250	4-6	S	90	249	73,5	175,5	124,5
280	2	D, S, E	90	249	73,5	175,5	124,5
280	4-6	D, S, E	90	249	73,5	175,5	124,5

Tolerances	
A, B	ISO js14
C, CA	± 0.8
D 55-75	ISO m6
DA 45-55	ISO k6
F, FA	ISO h9
H	+0 -0.5

Dimension drawings
Flange-mounted aluminum motors, 250 - 280

Flange-mounted motor; IM B5 (IM 3001), IM 3002

IM B5 (IM 3001), IM 3002

Motor size	Poles	AC	AE	D	DA	DB	DC	E[1]	EA	EG	EH	F	FA	G	GA	GB	GC	HB[3]	HB[4]	HE[3]	HE[4]
250	2	471	243	60	55	M20	M20	140	110	42	42	18	16	53	64	49	59	344	377	268	284
250	4-8	471	243	65	55	M20	M20	140	110	42	42	18	16	58	69	49	59	344	377	268	284
280	2	471	243	65	55	M20	M20	140	110	42	42	18	16	58	69	49	59	-	377	-	284
280	4-8	471	243	75	55	M20	M20	140	110	42	42	20	16	67.5	79.5	49	59	-	377	-	284

Motor size	Poles	L	LA	LB	LC	M	N	P	S	T	UB[2]	VA	VB	VC[3]	VC[4]	VD[3]	VD[4]	VE[3]	VE[4]
250	2	884	24	744	1010	500	450	550	19	5	2xFL13	93.5	243	112	77	179	167	145	122
250	4-8	884	24	744	1010	500	450	550	19	5	2xFL13	93.5	243	112	77	179	167	145	122
280	2	884	24	744	1010	500	450	550	19	5	2xFL21	93.5	243	-	77	-	167	-	122
280	4-8	884	24	744	1010	500	450	550	19	5	2xFL21	93.5	243	-	77	-	167	-	122

Tolerances	
D 55-75	ISO m6
DA 45-55	ISO k6
F, FA	ISO h9
N	ISO j6

Footnotes

[1] Shoulder of shaft extension and contact surface of flange are in the same plane.
[2] Flange opening is provided with pipe flange FL 13, with tapped lead-in holes plugged with sealing plugs. Single- and two-speed motors: 2 x M40 + M16. Motors for 230VD 50Hz or 250 SMC-2, 250 SMC-4 and all 280 have pipe flange FL21 and 2 x M63 + M16
[3] For flange opening FL13: 2 x M40 + M16
[4] For extra large flange opening FL21: 2 x M63 + M16

Dimension drawings
Flange-mounted aluminum motors, 250 - 280, IE3 L generation

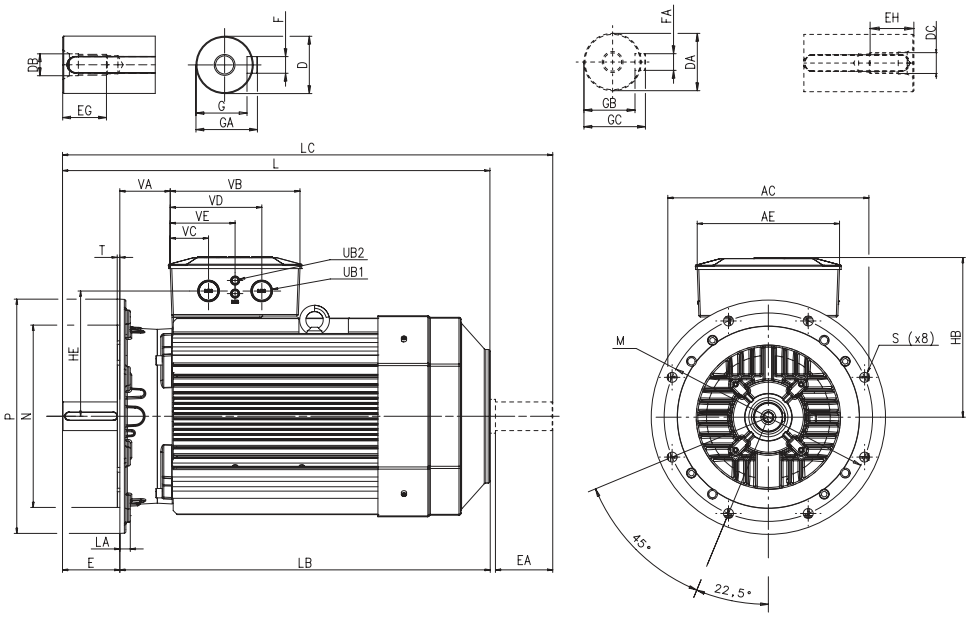

IM B5 (IM 3001), IM 3002

Motor size	Poles	Voltage code	AC	AE	D	DA	DB	DC	E	EA	EG	EH	F	FA	G	GA	GB	GC
250	2	D, E	386	273	60	55	M20	M20	140	110	42	42	18	16	53	64	49	59
250	4-6	D, E	386	273	65	55	M20	M20	140	110	42	42	18	16	58	69	49	59
250	2	S	386	273	60	55	M20	M20	140	110	42	42	18	16	53	64	49	59
250	4-6	S	386	273	65	55	M20	M20	140	110	42	42	18	16	58	69	49	59
280	2	D, S, E	471	273	65	55	M20	M20	140	110	42	42	18	16	58	69	49	59
280	4-6	D, S, E	471	273	75	55	M20	M20	140	110	42	42	20	16	67,5	79,5	49	59

Motor size	Poles	Voltage code	HE	L	LA	LB	LC	M	N	P	S	T	UB1	UB2	VA	VB	VC	VD	VE
250	2	D, E	241	880	22	740	1006	500	450	550	19	5	2*M40	2*M16	90	249	73,5	175,5	124,5
250	4-6	D, E	241	880	22	740	1006	500	450	550	19	5	2*M40	2*M16	90	249	73,5	175,5	124,5
250	2	S	241	880	22	740	1006	500	450	550	19	5	2*M63	2*M16	90	249	73,5	175,5	124,5
250	4-6	S	241	880	22	740	1006	500	450	550	19	5	2*M63	2*M16	90	249	73,5	175,5	124,5
280	2	D, S, E	241	884	25	744	1010	500	450	550	19	5	2*M63	2*M16	90	249	73,5	175,5	124,5
280	4-6	D, S, E	241	884	25	744	1010	500	450	550	19	5	2*M63	2*M16	90	249	73,5	175,5	124,5

Tolerances	
D 55-75	ISO m6
DA 45-55	ISO k6
F, FA	ISO h9
N	ISO j6

Dimension drawings
Foot- and flange-mounted aluminum motors, 250 - 280

Foot- and flange-mounted motor; IM B35 (IM 2001), IM 2002

IM B35 (IM 2001), IM 2002

Motor size	Poles	A	AA	AB	AC	AE	B	B'	BA	BB	C	CA	CA'	CB	D	DA	DB	DC	E[1]	EA	EG	EH	F
250	2	406	78	474	471	243	311	349	106	409	168	281	243	40	60	55	M20	M20	140	110	42	42	18
250	4-8	406	78	474	471	243	311	349	106	409	168	281	243	30	65	55	M20	M20	140	110	42	42	18
280	2	457	103	525	471	243	368	419	92	489	190	202	151	38	65	55	M20	M20	140	110	42	42	18
280	4-8	457	103	525	471	243	368	419	92	489	190	202	151	38	75	55	M20	M20	140	110	42	42	20

Motor size	Poles	FA	G	GA	GB	GC	H	HA	HD[3]	HD[4]	HE[3]	HE[4]	K	L	LA	LB	LC	M	N	P	S	T	UB[2]
250	2	16	53	64	49	59	250	30	594	627	268	284	22	884	24	744	1010	500	450	550	19	5	2xFL13
250	4-8	16	58	69	49	59	250	30	594	627	268	284	22	884	24	744	1010	500	450	550	19	5	2xFL13
280	2	16	58	69	49	59	280	40	-	657	-	284	24	884	24	744	1010	500	450	550	19	5	2xFL21
280	4-8	16	68	80	49	59	280	40	-	657	-	284	24	884	24	744	1010	500	450	550	19	5	2xFL21

Motor size	Poles	VA	VB	VC[3]	VC[4]	VD[3]	VD[4]	VE[3]	VE[4]
250	2	93	243	112	77	179	167	145	122
250	4-8	93	243	112	77	179	167	145	122
280	2	93	243	-	77	-	167	-	122
280	4-8	93	243	-	77	-	167	-	122

Tolerances	
A, B	ISO js14
C, CA	± 0.8
D 55-75	ISO m6
DA 45-55	ISO k6
F, FA	ISO h9
H	+0 -0.5
N	ISO js6

Footnotes

[1] Shoulder of shaft extension and contact surface of flange are in the same plane.
[2] Flange opening is provided with pipe flange FL 13, with tapped lead-in holes plugged with sealing plugs. Single- and two-speed motors: 2 x M40 + M16. Motors for 230VD 50Hz or 250 SMC-2, 250 SMC-4 and all 280 have pipe flange FL21 and 2 x M63 + M16
[3] For flange opening FL13: 2 x M40 + M16
[4] For extra large flange opening FL21: 2 x M63 + M16

Dimension drawings

Foot- and flange-mounted aluminum motors, 250 - 280, IE3 L generation

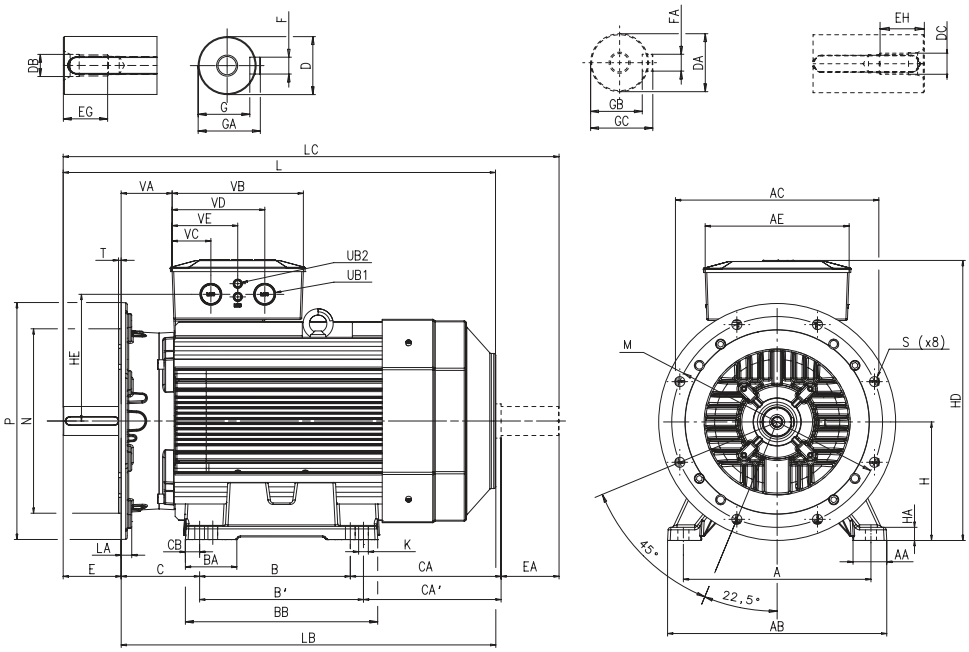

IM B35 (IM 2001), IM 2002

Motor size	Poles	Voltage code	A	AA	AB	AC	AE	B	B'	BA	BB	C	CA	CA'	CB	D	DA	DB	DC	E	EA
250	2	D, E	406	76	472	425	273	311	349	84	409	168	277	239	30	60	55	M20	M20	140	110
250	4-6	D, E	406	76	472	425	273	311	349	84	409	168	277	239	30	65	55	M20	M20	140	110
250	2	S	406	76	472	425	273	311	349	84	409	168	277	239	30	60	55	M20	M20	140	110
250	4-6	S	406	76	472	425	273	311	349	84	409	168	277	239	30	65	55	M20	M20	140	110
280	2	D, S, E	457	102	522	471	273	368	419	92	489	190	202	151	37	65	55	M20	M20	140	110
280	4-6	D, S, E	457	102	522	471	273	368	419	92	489	190	202	151	37	75	55	M20	M20	140	110

Motor size	Poles	Voltage code	EG	EH	F	FA	G	GA	GB	GC	H	HA	HD	HE	K	L	LA	LB	LC
250	2	D, E	42	42	18	16	53	64	49	59	250	40	578	241	22	880	22	740	1006
250	4-6	D, E	42	42	18	16	58	69	49	59	250	40	578	241	22	880	22	740	1006
250	2	S	42	42	18	16	53	64	49	59	250	40	578	241	22	880	22	740	1006
250	4-6	S	42	42	18	16	58	69	49	59	250	40	578	241	22	880	22	740	1006
280	2	D, S, E	42	42	18	16	58	69	49	59	280	40	631	241	24	884	25	744	1010
280	4-6	D, S, E	42	42	20	16	67,5	79,5	49	59	280	40	631	241	24	884	25	744	1010

Motor size	Poles	Voltage code	M	N	P	S	T	UB1	UB2	VA	VB	VC	VD	VE
250	2	D, E	500	450	550	19	5	2*M40	2*M16	90	249	73,5	175,5	124,5
250	4-6	D, E	500	450	550	19	5	2*M40	2*M16	90	249	73,5	175,5	124,5
250	2	S	500	450	550	19	5	2*M63	2*M16	90	249	73,5	175,5	124,5
250	4-6	S	500	450	550	19	5	2*M63	2*M16	90	249	73,5	175,5	124,5
280	2	D, S, E	500	450	550	19	5	2*M63	2*M16	90	249	73,5	175,5	124,5
280	4-6	D, S, E	500	450	550	19	5	2*M63	2*M16	90	249	73,5	175,5	124,5

Tolerances	
A, B	ISO js14
C, CA	± 0.8
D 55-65	ISO m6
DA 45-55	ISO k6
F, FA	ISO h9
H	+0 -0.5
N	ISO js6

Accessories
Slide rails for motor sizes 160 to 280

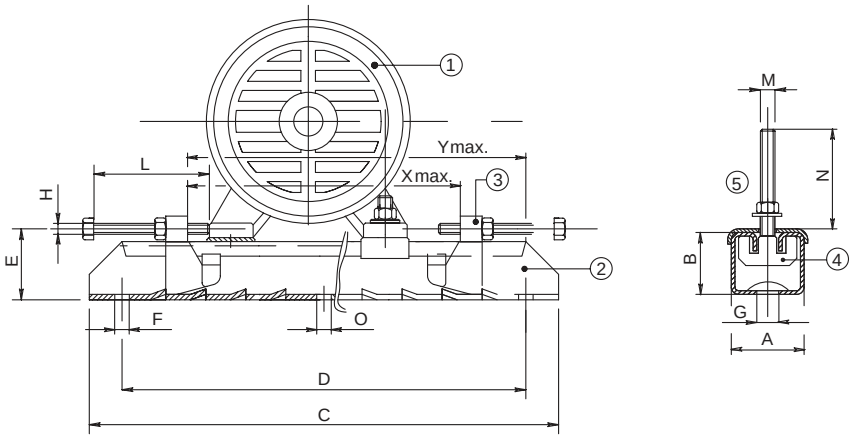

1 Motor | 2 Rail | 3 Movable adjusting bolt | 4 Fixing bolt, motor | 5 Plate

Motor size	Type	Product code 3GZV103001-	A	B	C	D	E	F	G	H	L	M	N	O	Xmax	Ymax	Weight (kg)
[1]																	
160-180	TT180/12	-14	75	42	700	630	57	17	26	M12	120	M12	50	-	520	580	12.0
200-225	TT225/16	-15	82	50	864	800	68	17	27	M16	140	M16	65	17	670	740	20.4
250-280	TT280/20	-16	116	70	1072	1000	90	20	27	M18	150	M20	80	20	870	940	43.0

[1] Smaller sizes on request.

Each set includes two complete slide rails including screw for mounting the motor on the rails. Screws for mounting the rails on the foundation are not included. Slide rails are supplied with unmachined lower surfaces and should, prior to tightenng down, be supported in a suitable manner.

Motors in brief
IE2/IE3 aluminum motors, sizes 63 - 132

Size	M3AA	63	71	80	90	100	112	132
Stator and end shields	Material	Die-cast aluminum alloy						
	Paint color shade	Munsell blue 8B 4.5/3.25						
	Corrosion class	C3 medium according to ISO/EN 12944-5						
Feet	Material	Integrated aluminum feet						
End shields	Material	Die-cast aluminum alloy						
	Paint color shade	Munsell blue 8B 4.5/3.25						
	Corrosion class	C3 medium according to ISO/EN 12944-5						
Bearings	D-end	6202-2Z/C3	6203-2Z/C3	6204-2Z/C3	6205-2Z/C3	6306-2Z/C3	6306-2Z/C3	6208-2Z/C3 6308-2Z/C3 (SM_)
	N-end	6201-2Z/C3	6202-2C/C3	6203-2Z/C3	6204-2Z/C3	6205-2Z/C3	6205-2Z/C3	6206-2Z/C3
Axially locked bearings		Locked at D-end with internal retaining ring			Locked at D-end			
Bearing seals	D-end	V-ring						
	N-end	Labyrinth seal						
Lubrication		Permanently lubricated shielded bearing						
		Grease temperature range -40 °C to +160 °C						
Measuring nipples		Not included						
Rating plate	Material	Aluminum						
Terminal box	Frame and cover	Die-cast aluminum alloy, integrated in stator						
	Corrosion class	C3 medium according to ISO/EN 12944-5						
	Cover screws	Zinc-electroplated stee						
Connections	Knock-out openings	1xM16xPg11	2x(M20 + M20)		2x(M20+M25)			2x(M20+M25) [1] 2x(M40+M32+M12) [2]
	Terminal box	Cable lugs, 6 terminals			6 screw terminals			Cable lugs, 6 terminals
Fan	Material	Glass-fiber reinforced polypropylene						
Fan cover	Material	Polypropylene						
Stator winding	Material	Copp						
	Insulation	Insulation class F						
	Winding protection	Optional						
Rotor winding	Material	Die-cast aluminum						
Balancing method		Half-key balancin						
Keyway		Closed keyway						
Drain holes		Drain holes with closable plastic plugs, open on delivery						
Enclosure		IP 55						
Cooling method		IC 411						

[1] Types S, SB, M, MA
[2] Types SC, MC, SMA - SME

Motors in brief
IE2/IE3 aluminum motors, sizes 160 - 280

Size	M3AA	160	180	200	225	250	280
Stator	Material	Die-cast aluminum alloy		Extruded aluminum alloy			
	Paint color shade	Munsell blue 8B 4.5/3.25					
	Corrosion class	C3 medium according to ISO/EN 12944-5					
Feet	Material	Separate aluminum feet		Separate cast iron feet			
End shields	Material	Cast iron					
	Paint color shade	Munsell blue 8B 4.5/3.25					
	Corrosion class	C3 medium according to ISO/EN 12944-5					
Bearings	D-end	6309-2Z/C3	6310-2Z/C3	6312-2Z/C3	6313-2Z/C3	6315-2Z/C3	6316/C3 [1]
	N-end	6209-2Z/C3	6209-2Z/C3	6210-2Z/C3	6212-2Z/C3	6213-2Z/C3	6213/C3
Axially locked bearings		Locked at D-end					
Bearing seals		Axial seal at both ends					
Lubrication		Permanently lubricated shielded bearings					Regreasable
		Grease temperature range -40 °C to +160 °C					
Measuring nipples		Not included					
Rating plate	Material	Aluminum					
Terminal box	Material	Die-cast aluminum alloy, integrated in stator		Deep-drawn steel sheet, bolted to stator			
	Corrosion class	C3 medium according to ISO/EN 12944-					
	Cover screws	Zinc-electroplated steel					
Connections	Openings	(2xM40 + M16) + (2xM40)		2xFL13, 2xM40 + 1xM16			2xFL21
		Type: knock-outs		Voltage code S; 2xFL21, 2xM63 + 1xM16			2xM63, 1xM16
	Screws	M6		M10			
	Terminal box	6 terminals for connection with cable lugs (not included)					
Fan	Material	Glass-fiber reinforced polypropylene					
Fan cover	Material	Steel					
	Paint color shade	Munsell blue 8B 4.5/3.25					
	Corrosion class	C3 medium according to ISO/EN 12944-5					
Stator winding	Material	Copper					
	Insulation	Insulation class F					
	Winding protection	3 PTC thermistors, 150 °C					
Rotor winding	Material	Die-cast aluminum					
Balancing method		Half-key balancing					
Keyway		Closed keyway					
Drain holes		Drain holes with closable plastic plugs, open on delivery					
Enclosure		IP 55					
Cooling method		IC 411					

[1] 6315/C3 for 2-pole motors

Total product offering
Motors, generators and mechanical power transmission products with a complete portfolio of services

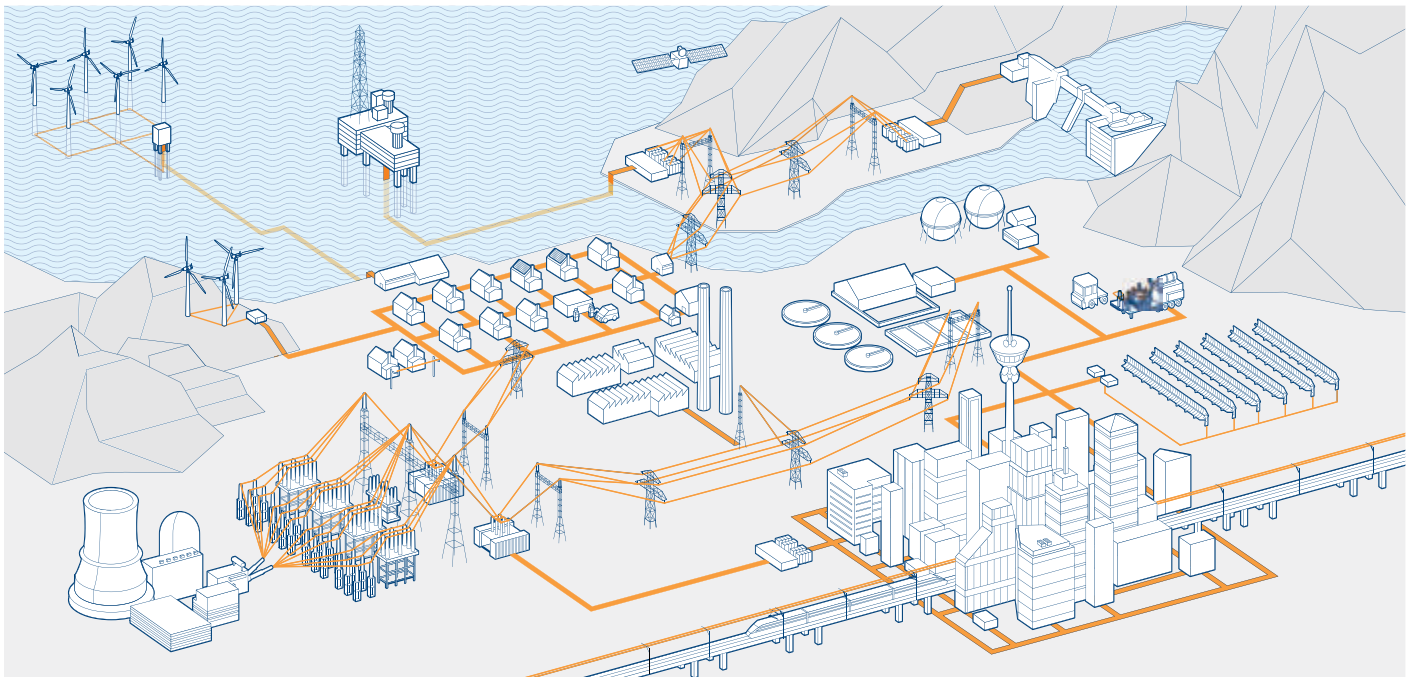

ABB is the leading manufacturer of low, medium and high voltage motors and generators, and mechanical power transmission products. ABB products are backed by a complete portfolio of services. Our in-depth knowledge of virtually every type of industrial process ensures we always specify the best solution for your needs.

Low and high voltage IEC induction motors
- Process performance motors
- General performance motors
- High voltage cast iron motors
- Induction modular motors
- Slip-ring modular motors

Low and medium voltage NEMA motors
- Steel frame open drip proof (ODP) motors
- Weather protected, water cooled,fan ventilated
- Cast iron frame (TEFC)
- Air to air cooled (TEAAC) motors

Motors and generators forexplosive atmospheres
- IEC and NEMA motors andgenerators, for all protection types

Synchronous motors

Synchronous generators
- Synchronous generators fordiesel and gas engines
- Synchronous generators forsteam and gas turbines

Wind power generators

Generators for small hydro

Other motors and generators
- Brake motors
- DC motors and generators
- Gear motors
- Marine motors and generators
- Single phase motors
- Motors for high ambient temperatures
- Synchronous reluctance motors
- Permanent magnet motors and generators
- High speed motors
- Smoke extraction motors
- Wash down motors
- Water cooled motors
- Generator sets
- Roller table motors
- Low inertia motors
- Traction motors and generators

Life cycle services

Mechanical power transmissioncomponents, bearings, gearings

Life cycle services and support
From pre-purchase to migration and upgrades

ABB offers a complete portfolio of services to ensure trouble-free operation and long product lifetimes. These services cover the entire life cycle. Local support is provided through a global network of ABB service centers and certified partners.

Pre-purchase
ABB's front-end sales organization can help customers to quickly and efficiently select, configure and optimize the right motor or generator for their application.

Installation and commissioning
Professional installation and commissioning by ABB's certified engineers represent an investment in availability and reliability over the entire life cycle.

Engineering and consulting
ABB's experts provide energy efficiency and reliability appraisals, advanced condition and performance assessments and technical studies.

Condition monitoring and diagnosis
Unique services collect and analyze data to provide early warnings of problems before failures can occur. All critical areas of the equipment are covered.

Maintenance and field services
ABB offers life cycle management plans and preventive maintenance products. The recommended four-level maintenance program covers the entire product lifetime.

Spare parts
Spare parts and support are offered throughout the life cycle of ABB products. In addition to individual spares, tailored spare part packages are also available.

Repair and refurbishment
Support for all ABB motors and generators and other brands is provided by ABB's global service organization. Specialist teams can also deliver emergency support.

Migration and upgrades
Life cycle audits determine the optimum upgrades and migration paths. Upgrades range from individual components to direct replacement motors and generators.

Training
Product and service training courses take a practical approach. The training ranges from standard courses to specially tailored programs to suit customer requirements.

Specialized support
Specialized support is offered through ABB's global service organization. Local units provide major and minor repairs as well as overhauls and reconditioning.

Service contracts
Service contracts are tailored to the customer's needs. The contracts combine ABB's entire service portfolio and 120 years of experience to deploy the optimal service practices.

Contact us

www.abb.com/motors&generators

We reserve the right to make technical changes or modify the contents of this document without prior notice. With regard to purchase orders, the agreed particulars shall prevail. ABB does not accept any responsibility what so ever for potential errors or possible lack of information in this document.

We reserve all rights in this document and in the subject matter and illustrations contained herein. Any reproduction, disclosure to third parties or utilization of its contents – in whole or in parts – is forbidden without prior written consent of ABB.

© Copyright 2015 ABB.
All rights reserved.

9AKK105944 EN 10-2015

شرکت رهاب صنعت سپاهان
RAHAB SANAT
مرکز تخصصی فروش و خدمات انواع الکتروپمپ، گیربکس الکتروموتور
تلفن: ۵-۰۳۱۳۲۳۵۲۸۶۱
فکس: ۰۳۱۳۲۳۵۲۸۶۶
همراه: ۰۹۳۳۷۲۷۲۴۲۲
Rahab.sanat@gmail.com
اصفهان، خیابان مسجد سید
روبه‌روی خیابان پنج رمضان
فروش اینترنتی
www.rahabsanat.ir

Power and productivity
for a better world™