TECHNICAL

RONLTAI

LDL®

SIDE CHANNEL COMPRESSOR / VACUUM PUMP

Fall into the excellent power

Large flow....

High vacuum....

High pressure....

Equipment

- Fan Testing Device System.

  According to Air Movement & Control Association announced " ANSI/AMCA210-85 Laboratory methods of fans for rating standards in the United States".
- Precision Coordinate Measuring Machine
- Induction Motor Automatic Test System.
- CNC Lathe
- Stator Coil & Wedge Inserter
- Tapping Center
- Milling
- Dynamic Balancing Machine
- Stator Winding Tester
- Automatic Tester for finished products of motors.
- All kinds of air pressure, oil hydraulic automatic machinery and inspection equipment.

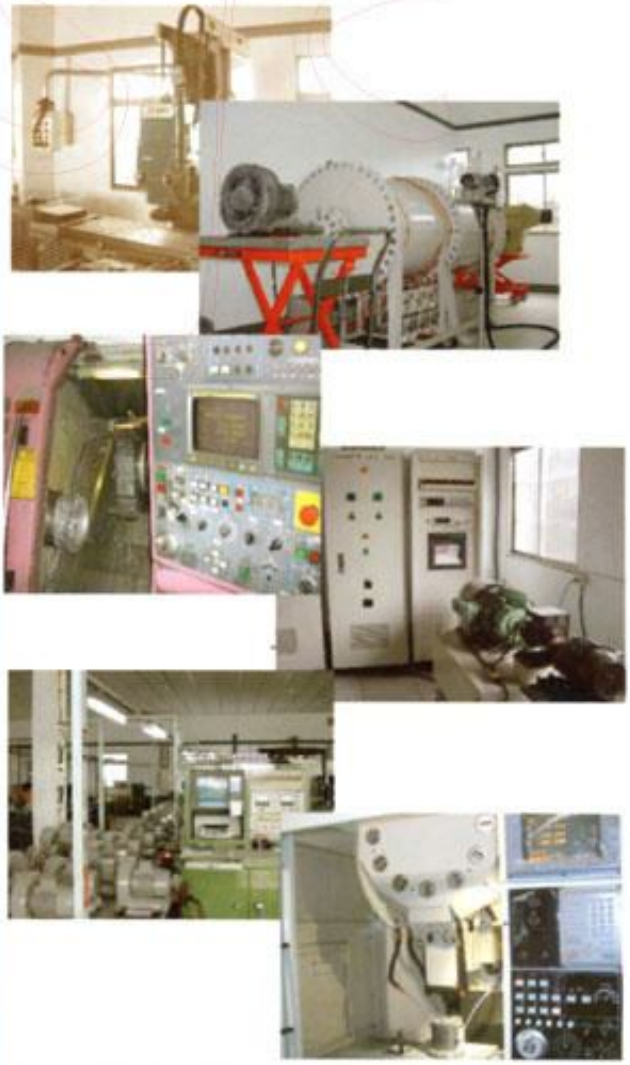

ISO 9001 CE UL

QUALITY CONTROL

Quiet

Equipped with Ron Tai's low-noise、high-efficiency IP54 induction motor and specially designed mufflers, all our blowers series features quiet operation.

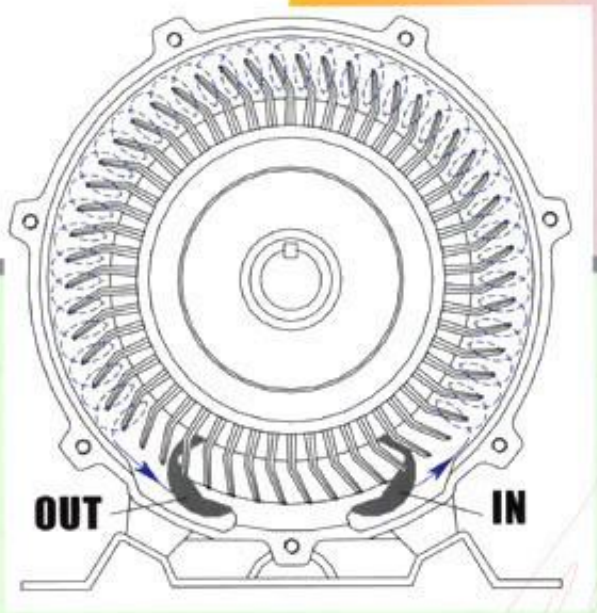

RELIABLE

Mechanism Features

Three-dimensional blower impeller's rotation enables the air between blades to accelerate along the radius direction, the air is forced to return back to the base of the impeller due to pressure difference, throwing it outward and forward through a spiral path, this action repeated many times and caused the air to gain pressure, until it reaches the outlet port of the housing, the air is expelled from the impeller and discharged from the blower through the outlet.

Longer operation life

External bearing design allows bearings to operate in low temperature, features quick heat dissipation and uniform loading capacity. Lubrication oil is more durable and ensures maintenance an easy job.

Easy installation

The bases of all our blower models are made with flexible steel plates that feature shock absorption. Fastened with screws.The bases can also be fixed through the screw holes on the front cover,enabling either vertical or horizontal installation as required.

Long-time operation

Made of aluminum alloy, all Ron Tai's blowers are lightweight and excellent in hear dissipation, thus allows long time operation even under ambient temperature reaches 40℃, insulation class F and H ensures better reliability.

Fully closed unit

Multi-layer shaft seals are used to thoroughly separate motor coil from blower body, ensures excellent performance and prevent motor from damage.

Side channel compressor / vacuum pump suction and blowing examples

Side channel vacuum pump application examples(for suction)

Bean Washing Equipment

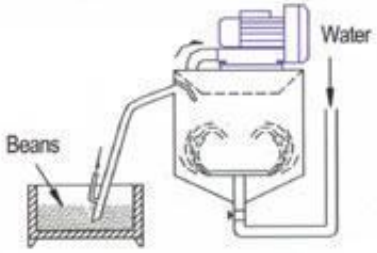

Work Conveyance Equipment

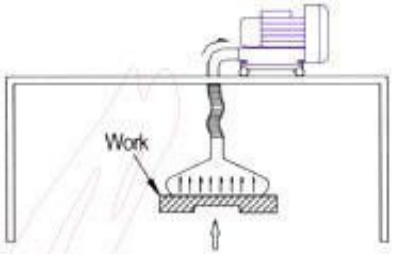

Powder & Granule Conveyor

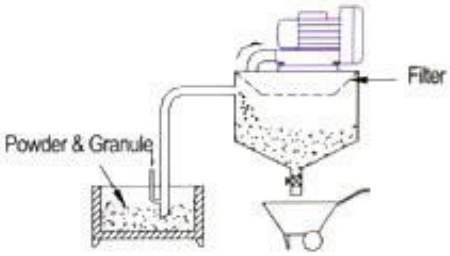

Suction at the Working Site

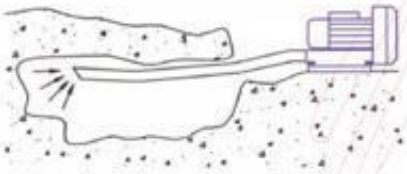

Sucking Industrial Dust

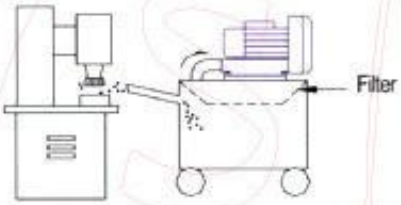

Paperboard Conveyor

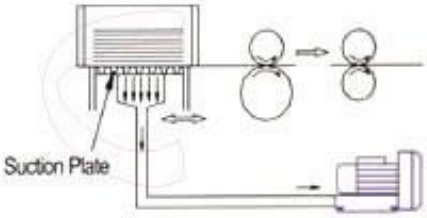

Degasification Treatment

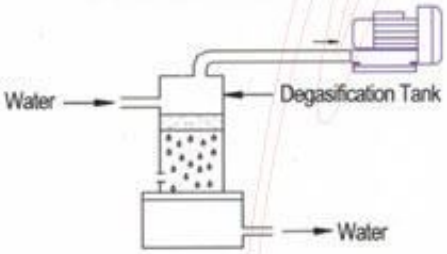

Bottle Filling Machine

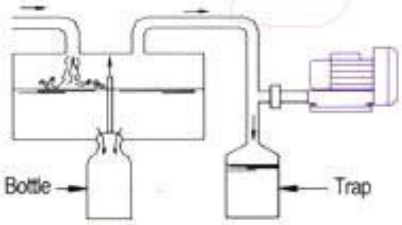

Automatic Weaving Machine

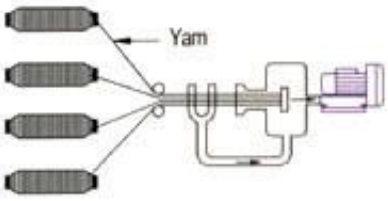

Paper Cutting Equipment

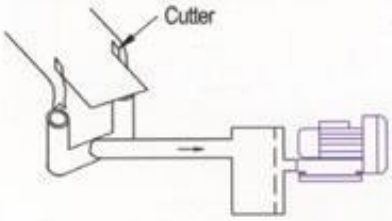

Printing Paper Conveyor

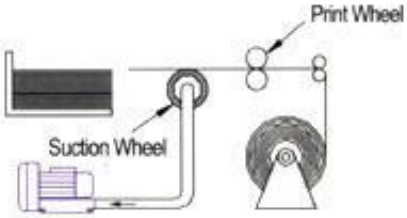

Dust-Removing Equipment

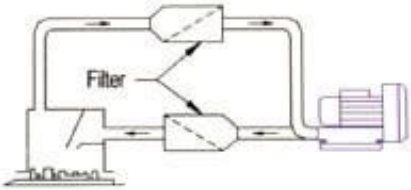

Health

Side channel compressor application examples(for blowing)

Purifying Tank

Car-Wash Blow-Dry Equipment

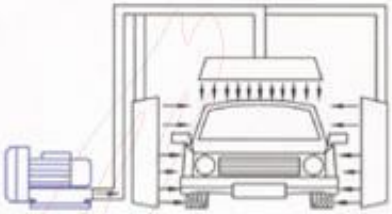

Floating Element of Paper Cutter

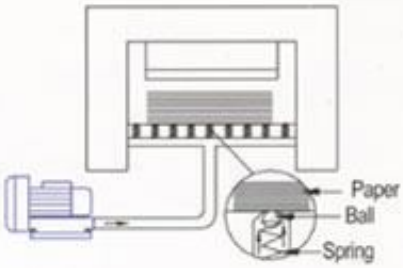

Bottle Air-Drying

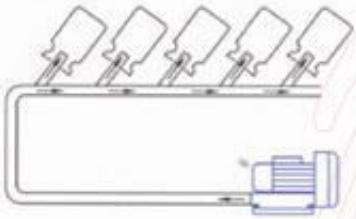

Bubble Bath

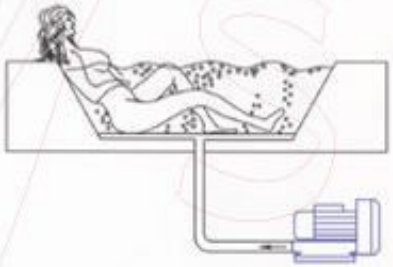

Air Drying After Printing

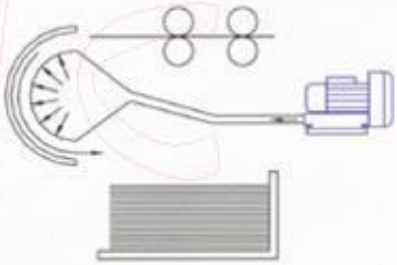

Fermentation

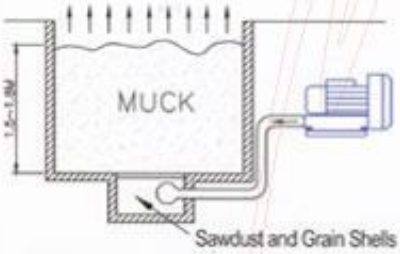

Oxygen Supply for Culture Field

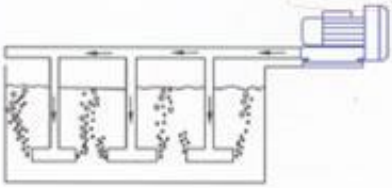

Combustion Furnace

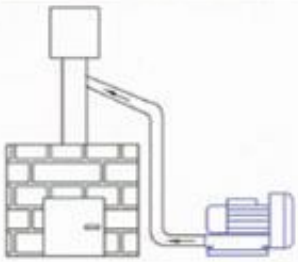

Vegetable & Fruit Washer

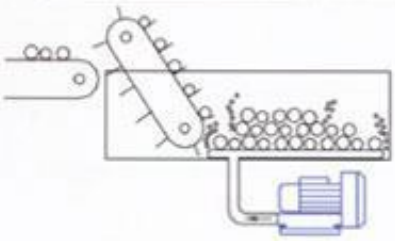

Powder & Granule Conveyor

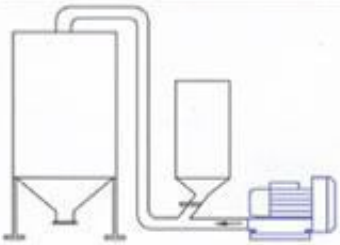

Electrolyte Stirrer

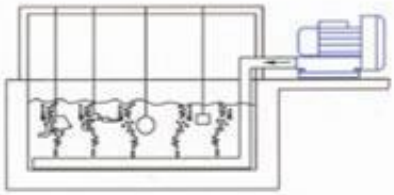

RT Series

Single-stage side channel blower with air flow max. to 1134 m³/hr and air pressure max. to 450mbar.

Two-stage side channel blower (high pressure) with air flow max. to 575 m³/hr and air pressure max. to 580mbar.

Two-stage side channel blower (large flow) with air flow max. to 850 m³/hr and air pressure max. to 270mbar.

Technical Data for 50Hz IP54 3Phase (1Phase)

Type No.	Curve No.	Output (Kw)	Stock Voltage Δ / Y (U1, V1, W1 U2, V2, W2)	Maximum Air Flow m^3/min	Security top limit Vacuum / Pressure (mbar)	Noise Level (dB)	Weight (Kg)
RT-1002	21F	0.18		0.8	50 / 60	53	6.5
RT-1002-1	21F	0.18		0.8	50 / 60	53	6.5
RT-1002L	21F	0.18		0.8	50 / 60	50	6.5
RT-1003	22F	0.2		0.8	70 / 70	53	6.5
RT-1003-1	22F	0.2		0.8	70 / 70	53	6.5
RT-2005	31F	0.4	220 / 380	1.4	110 / 130	58	11
RT-2005-1	31F	0.4	230 / 400	1.4	110 / 130	58	11.5
RT-2005L	32F	0.4	240 / 415	1.4	110 / 130	58	11.5
RT-2005L-1	32F	0.4	208-255 / 360-440	1.4	110 / 130	58	12
RT-3009	41F	0.75	(110-120 / 220-240)	2.4	140 / 140	63	14.5
RT-3009-1	41F	0.75		2.4	140 / 140	63	15
RT-3009L	42F	0.75		2.4	140 / 140	63	15
RT-3009L-1	42F	0.75		2.4	140 / 140	63	15.5
RT-3011	43F	0.9		2.4	165 / 180	63	15.5
RT-3015	44F	1.3		2.4	175 / 200	63	16
RT-4011	51F	0.9		3.6	130 / 130	70	20.5
RT-4011-1	51F	0.9		3.6	130 / 130	70	21
RT-4015	52F	1.3		3.6	180 / 180	70	22
RT-4015-1	52F	1.3		3.6	180 / 180	70	22.5
RT-4015L	52F	1.3		3.6	180 / 180	70	22.5
RT-4015L-1	52F	1.3		3.6	180 / 180	70	22.5
RT-4018-1	53F	1.5	220 / 380	3.6	210 / 220	70	23
RT-4019	53F	1.75	230 / 400	3.6	210 / 220	70	23
RT-4019L	54F	1.75	240 / 415	3.6	210 / 220	70	23.5
RT-4026	55F	2.2	208-255 / 360-440	3.6	220 / 270	70	26
RT-5026	61F	2.2	(220-240)	5.2	230 / 230	72	32
RT-5026-2	61F	2.2		5.2	230 / 230	72	33.5
RT-5026L	61F	2.2		5.2	230 / 230	72	33
RT-6037	62F	3.4		5.2	260 / 280	72	35
RT-6037-2	62F	3.4		5.2	260 / 280	72	36.5
RT-6037L	62F	3.4		5.2	260 / 280	72	36
RT-6046	63F	4		5.2	270 / 330	72	38
RT-7063	81F	5.5	220 / 380	9.2	270 / 300	74	78
RT-8086	82F	7.5	230 / 400	9.2	300 / 400	74	82
RT-9110	91F	9	240 / 415	18.9	200 / 200	76	100
RT-9150	92F	13	220-240 / 380-415	18.9	300 / 300	76	112
RT-9220	93F	20		18.9	350 / 450	76	159
RT-23009	101F	0.75	220 / 380	1.5	200 / 240	60	17
RT-33019	111F	1.75	230 / 400	2.6	275 / 320	66	25
RT-33026	112F	2.2	240 / 415	2.6	280 / 375	66	28
RT-43037	121F	3.4	208-255 / 360-440	3.7	345 / 410	74	43
RT-43046	122F	4.0		3.7	355 / 495	74	45
RT-63046	131F	4.0		5.2	360 / 380	75	55
RT-63063	132F	5.5		5.2	410 / 515	75	72
RT-63086	133F	7.5		5.2	420 / 580	75	81
RT-64063	142F	5.5	220 / 380	7.8	200 / 220	75	70
RT-64086	143F	7.5	230 / 400	7.8	240 / 270	75	81
RT-83086	151F	7.5	240 / 415	9.6	320 / 320	76	112
RT-83130	152F	11	220-240 / 380-415	9.6	430 / 600	76	142
RT-83190	153F	16		9.6	450 / 700	76	160
RT-84086	161F	7.5		14.2	150 / 150	76	110
RT-84130	162F	11		14.2	260 / 260	76	140

The technical data is based on 1 bar (abs.) free atmosphere and 20°C with Inlet air density 1.2kg/m³,includes 10% variance.

All rights reserved for technical specification changes without prior approval from any source outside Ron Tai,when considered necessary based on our research and development.

HIGH PRECISION

LOW VIBRATION

Single-stage side channel blower with air flow max. to 1344 m³/hr and air pressure max. to 430mbar.

Two-stage side channel blower (high pressure) with air flow max. to 654 m³/hr and air pressure max. to 780mbar.

Two-stage side channel blower (large flow) with air flow max. to 990 m³/hr and air pressure max. to 270mbar.

Technical Data for 60Hz IP54 3Phase（1Phase）

Type No.	Curve No.	Output (Kw)	Stock Voltage Δ / Y (U1, V1, W1 U2, V2, W2)	Maximum Air Flow m³/min	Security top limit Vacuum / Pressure (mbar)	Noise Level (dB)	Weight (Kg)
RT-1002	21S	0.2		1.0	70 / 70	55	6.5
RT-1002-1	21S	0.2		1.0	70 / 70	55	6.5
RT-1002L	21S	0.2		1.0	70 / 70	55	6.5
RT-1003	22S	0.25		1.0	75 / 80	55	6.5
RT-1003-1	22S	0.25		1.0	75 / 80	55	6.5
RT-2005	31S	0.5	220 / 380	1.7	140 / 170	61	11
RT-2005-1	31S	0.5	230 / 400	1.7	140 / 170	61	11.5
RT-2005L	32S	0.5	240 / 415	1.7	140 / 170	61	11.5
RT-2005L-1	32S	0.5	220-265 / 380-460	1.7	140 / 170	61	12
RT-3009	41S	0.85	（110-120 / 220-240）	2.9	140 / 140	64	14.5
RT-3009-1	41S	0.85		2.9	140 / 140	64	15
RT-3009L	42S	0.85		2.9	140 / 140	64	15.5
RT-3009L-1	42S	0.85		2.9	140 / 140	64	15.5
RT-3011	43S	1.1		2.9	180 / 180	64	15.5
RT-3015	44S	1.5		2.9	205 / 230	64	16
RT-4011	51S	1.1		4.2	140 / 140	73	20.5
RT-4011-1	51S	1.1		4.2	140 / 140	73	21
RT-4015	52S	1.5		4.2	180 / 180	73	22
RT-4015-1	52S	1.5		4.2	180 / 180	73	22.5
RT-4015L	52S	1.5		4.2	180 / 180	73	22.5
RT-4015L-1	52S	1.5		4.2	180 / 180	73	22.5
RT-4018-1	53S	1.75	220 / 380	4.2	210 / 220	73	23
RT-4019	53S	1.9	230 / 400	4.2	210 / 220	73	23
RT-4019L	54S	1.9	240 / 415	4.2	210 / 220	73	23.5
RT-4026	55S	2.6	220-265 / 380-460	4.2	255 / 300	73	26
RT-5026	61S	2.6	（220-240）	6.2	220 / 220	77	32
RT-5026-2	61S	2.6		6.2	220 / 220	77	33.5
RT-5026L	61S	2.6		6.2	220 / 220	77	33.5
RT-6037	62S	3.7		6.2	280 / 280	77	35
RT-6037-2	62S	3.7		6.2	280 / 280	77	36.5
RT-6037L	62S	3.7		6.2	280 / 280	77	36
RT-6046	63S	4.6		6.2	315 / 320	77	38
RT-7063	81S	6.3	220 / 380	10.9	290 / 290	79	78
RT-8086	82S	8.6	230 / 400	10.9	350 / 400	79	82
RT-9110	91S	11	240 / 415	22.4	190 / 190	81	100
RT-9150	92S	15	220-240 / 380-415	22.4	290 / 290	81	112
RT-9220	93S	22		22.4	370 / 430	81	159
RT-23009	101S	0.85		1.8	245 / 245	66	17
RT-33019	111S	1.9	220 / 380	3.0	300 / 300	69	25
RT-33026	112S	2.6	230 / 400	3.0	350 / 435	69	28
RT-43037	121S	3.7	240 / 415	4.5	405 / 415	77	43
RT-43046	122S	4.6	220-265 / 380-460	4.5	410 / 500	77	45
RT-63046	131S	4.6		6.2	380 / 380	79	55
RT-63063	132S	6.3		6.2	425 / 530	79	72
RT-63086	133S	8.6		6.2	450 / 675	79	81
RT-64063	142S	6.3	220 / 380	9.2	200 / 220	79	70
RT-64086	143S	8.6	230 / 400	9.2	260 / 270	79	81
RT-83086	151S	8.6	240 / 415	10.9	320 / 320	81	112
RT-83130	152S	13	220-240 / 380-415	10.9	455 / 600	81	142
RT-83190	153S	19		10.9	650 / 780	81	160
RT-84086	161S	8.6		16.5	150 / 150	81	110
RT-84130	162S	13		16.5	260 / 260	81	140

High Efficiency

Insulation class F（<2.0kw）

Insulation class H（>2.0kw）

50Hz Suction Curve

VACUUM PUMP

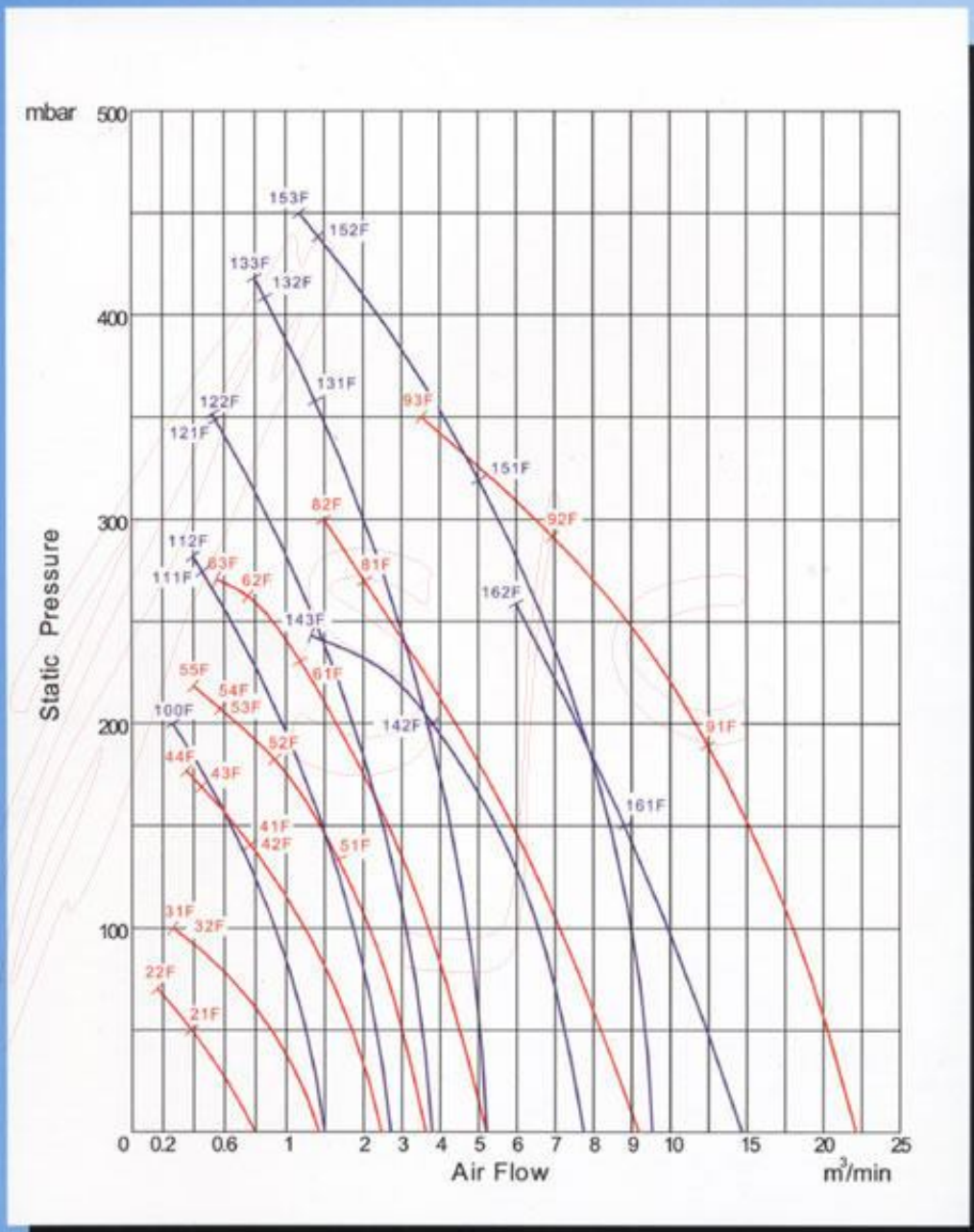

Installation altitude :
Max.of 1000m「3280ft」above sea level.
Operation :
Surface of the vacuum pump/compressor may reaches 160℃ (320℉) in operation.
Do not dispose of acid、alkali or flammable gas , otherwise explosion and damage may occur.
Required conditions :
- dry
- dust - free
- low - vibration (< 2.8mm/s)
- ambient temp. < 40℃ (104℉)

COMPRESSOR

50Hz **Blowing Curve**

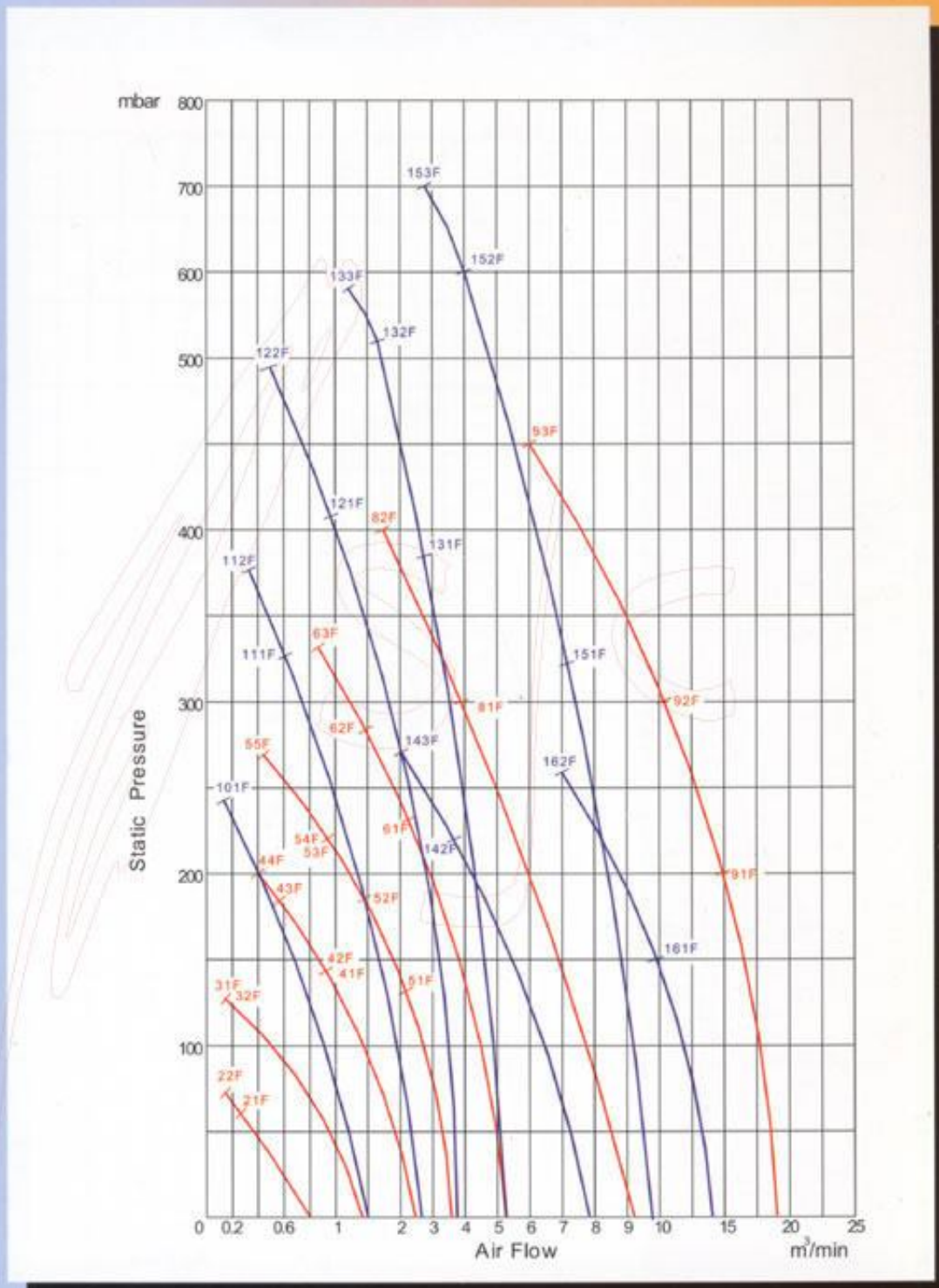

Ultra Air Power

60Hz Suction Curve

VACUUM PUMP

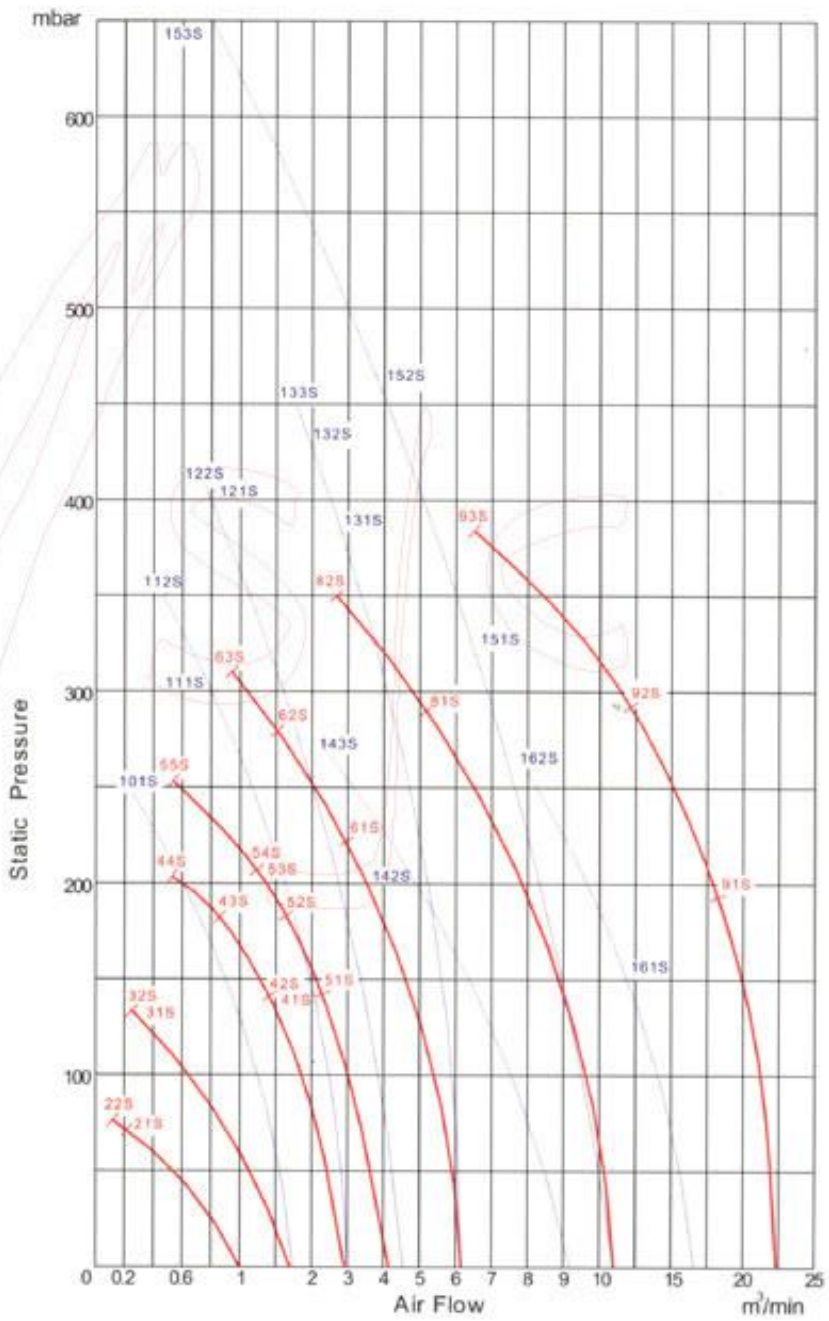

Installation altitude :
Max.of 1000m「3280ft」above sea level.
Operation :
Surface of the vacuum pump/compressor may reaches 160℃ (320℉) in operation.
Do not dispose of acid、alkali or flammable gas , otherwise explosion and damage may occur.
Required conditions :
- dry
- dust - free
- low - vibration (< 2.8mm/s)
- ambient temp. < 40℃ (104℉)

COMPRESSOR

60Hz Blowing Curve

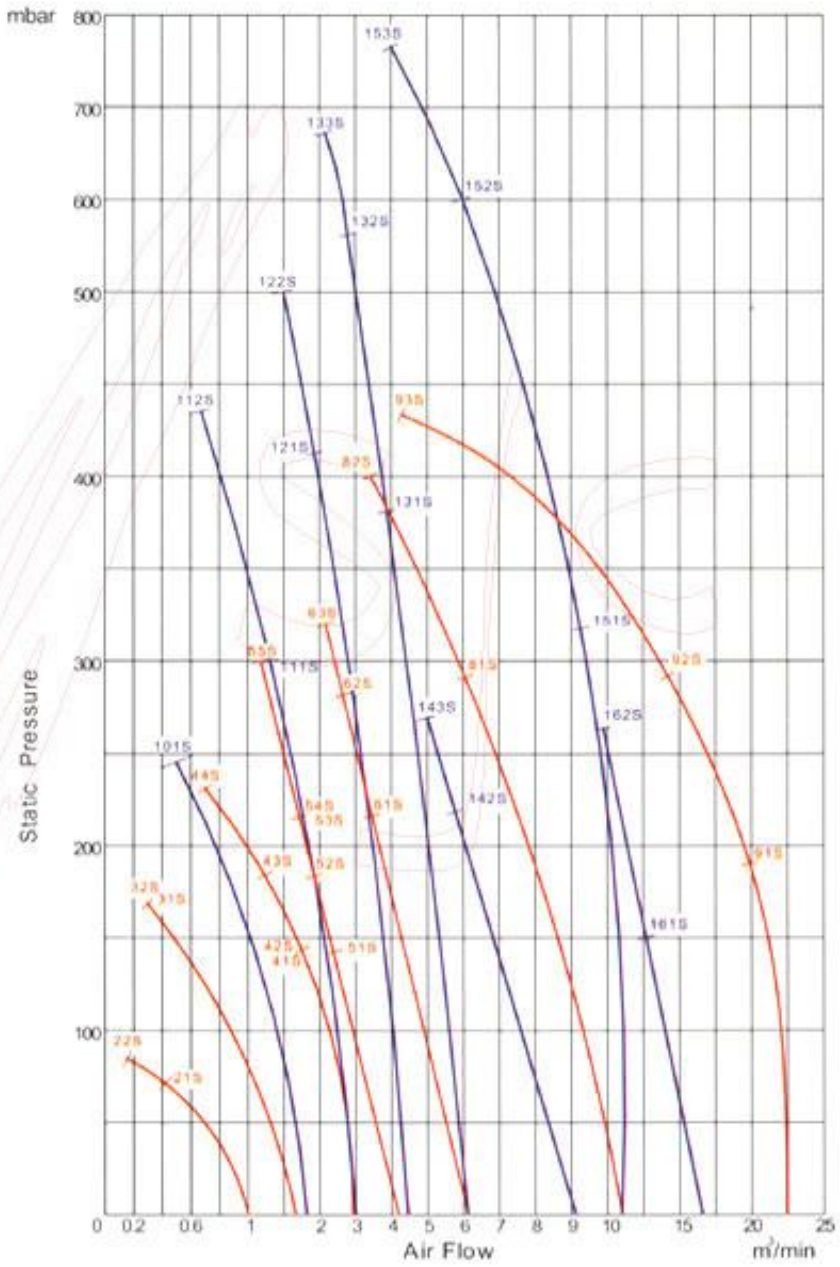

RON TAI PRODUCTS

SINGLE STAGE

PARTS LIST

ITEM	PART NAME	ITEM	PART NAME	ITEM	PART NAME	ITEM	PART NAME
01	Compressor Cover	04	Rotor	08	Fan	12	Upper Terminal Box
01-1E	Front Bearing Cover	04-1	Key	09	Fan Cover	12-1	Rubber Gasket（Upper）
01-2E	Nipple	04-2	Oil Seal	10	Base	13	Silencer Mesh
02	Impeller	04-3	Felt Ring	10-1E	Support	14	Silencer Foam
02-1	Inner Bearing Cover	05	Stator & Coil	11	Under Terminal Box	15	Silencer Casing
02-2	Front Bearing	06	Motor Housing	11-1	Cable Gland	15-1	Silencer Gasket
02-3	Disc	06-1	Sponge Filler	11-2	Rubber Gasket（Under）	16	Inlet / Outlet
02-1E	Bearing Socket	06-1E	Bracket	11-3	Terminal Board	16-1	Inlet（Outlet）Gasket
03	Compressor Housing	06-1S	Capacitor Bracket	11-4	Board Base	16-3	Inlet（Outlet）Plug
03-3	Bronze Ring	06-2S	Capacitor	11-5	Wire Connection	16-1E	Inlet（Outlet）Plate
03-1L	Middle Motor Cover	06-3S	Steel Clip	11-6	Nut	16-2E	Inlet（Outlet）Cover
03-2L	VA-Seal	07	Motor Cover	11-1E	Plug	Parts not listed are standard ones, e.g.nut,screw,washer…	
03-3L	Front Bearing WP	07-1	Rear Bearing	11-2E	Steel Plate		
03-4L	Bearing Washer	07-2	Wave Washer	11-3E	Rubber Ring		

SYSTEM DRAWING

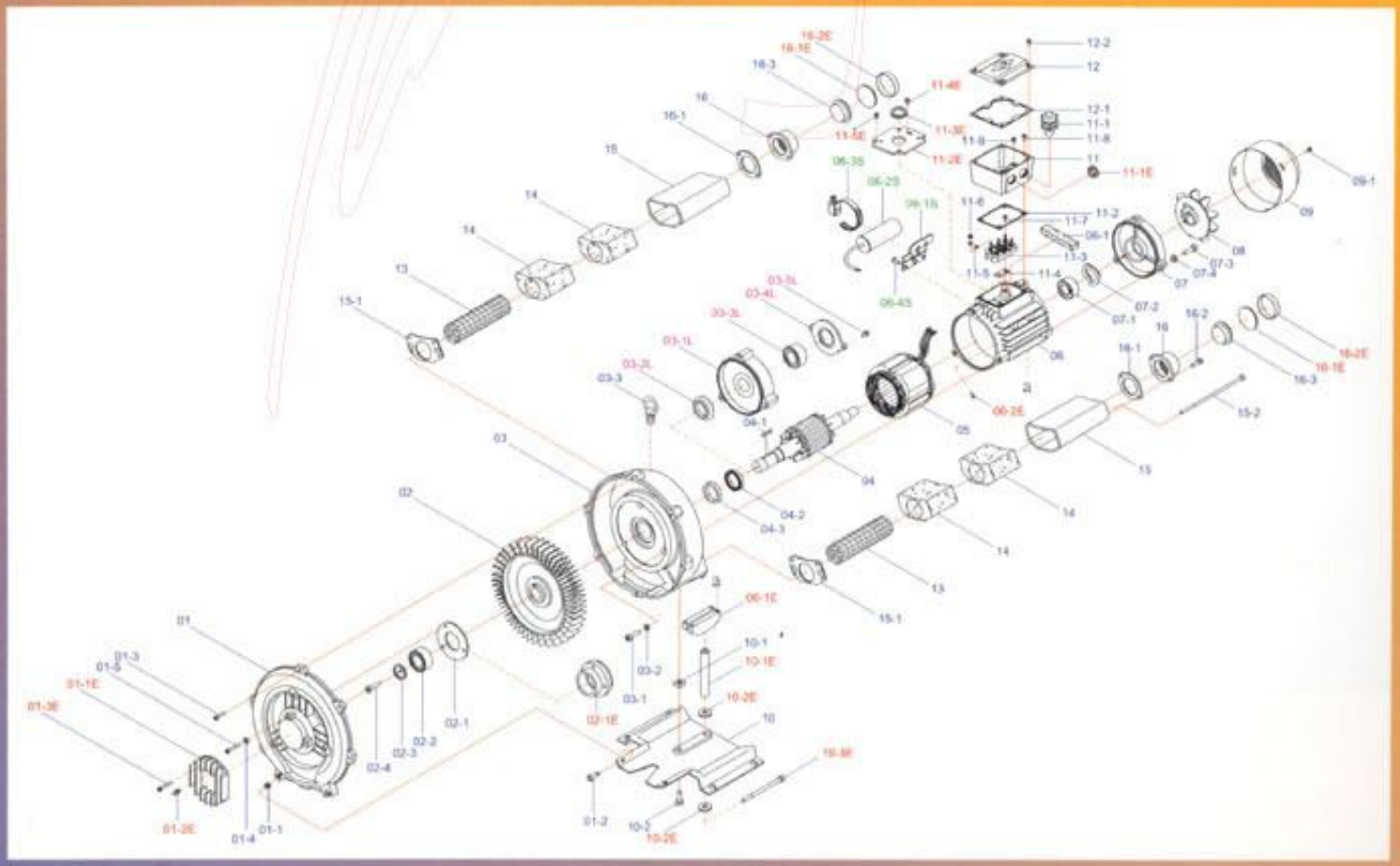

Specifications

Type Number		RT-1002	RT-1002-1	RT-1002L	RT-1003	RT-1003-1
Phase		3	1	3	3	1
Output	50Hz	0.18	0.18	0.18	0.20	0.20
Kw	60Hz	0.20	0.20	0.20	0.25	0.25
Voltage	50Hz	208-255/360-440	110-120/220-240	208-255/360-440	208-255/360-440	110-120/220-240
V	60Hz	220-265/380-460	110-120/220-240	220-265/380-460	220-265/380-460	110-120/220-240
Current	50Hz	0.9/0.52	2.9/1.45	0.9/0.52	1.2/0.69	3.0/1.5
Amp	60Hz	0.9/0.52	3.0/1.5	0.9/0.52	1.3/0.75	3.2/1.6
Vacuum	50Hz	50	50	50	70	70
mbar	60Hz	70	70	70	75	75
Pressure	50Hz	60	60	60	70	70
mbar	60Hz	70	70	70	80	80
Air Flow	50Hz	0.8	0.8	0.8	0.8	0.8
m^3/min	60Hz	1.0	1.0	1.0	1.0	1.0
Insulation Class		F	F	F	F	F
L1		90[3.55]	90[3.55]	111.5[4.39]	90[3.55]	90[3.55]
L2		209.5[8.25]	209.5[8.25]	231[9.09]	209.5[8.25]	209.5[8.25]

RT-1 Series

The high-quality grease used in the shield ball bearing (impeller side) resists high temperature for life time usage.
The high-reliable grease sealed ball bearing (fan side) resists high temperature for motor coil.

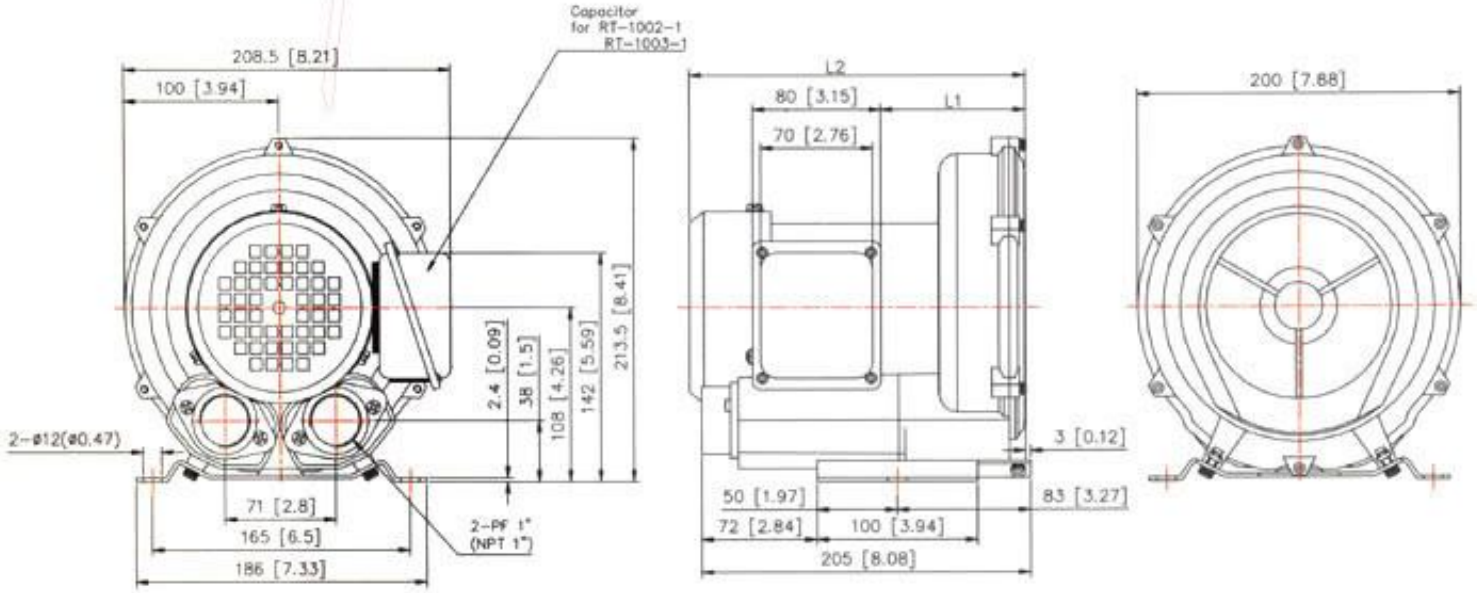

Type Number		RT-2005	RT-2005-1	RT-2005L	RT-2005L-1
Phase		3	1	3	1
Output	50Hz	0.4	0.4	0.4	0.4
Kw	60Hz	0.5	0.5	0.5	0.5
Voltage	50Hz	208-255/360-440	110-120/220-240	208-255/360-440	110-120/220-240
V	60Hz	220-265/380-460	110-120/220-240	220-265/380-460	110-120/220-240
Current	50Hz	2.1/1.2	5.6/2.8	2.1/1.2	5.6/2.8
Amp	60Hz	2.3/1.3	5.8/2.9	2.3/1.3	5.8/2.9
Vacuum	50Hz	110	110	110	110
mbar	60Hz	140	140	140	140
Pressure	50Hz	130	130	130	130
mbar	60Hz	170	170	170	170
Air Flow	50Hz	1.4	1.4	1.4	1.4
m^3/min	60Hz	1.7	1.7	1.7	1.7
Insulation Class		F	F	F	F
L1		80[3.15]	80[3.15]	103[4.06]	103[4.06]
L2		239[9.42]	239[9.42]	262[10.32]	262[10.32]

RT-2 Series

The high-quality grease used in the shield ball bearing (impeller side) resists high temperature for life time usage.
The high-reliable grease sealed ball bearing (fan side) resists high temperature for motor coil.

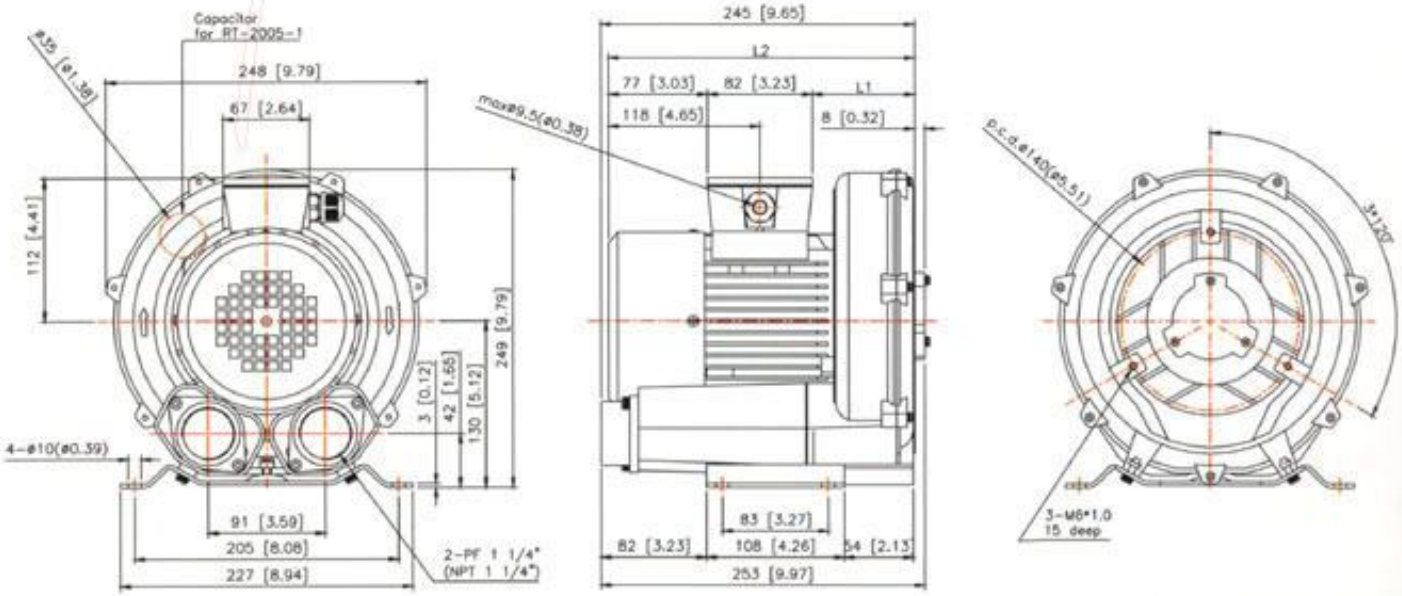

Type Number		RT-3009	RT-3009-1	RT-3009L	RT-3009L-1	RT-3011	RT-3015
Phase		3	1	3	1	3	3
Output	50Hz	0.75	0.75	0.75	0.75	0.9	1.3
Kw	60Hz	0.85	0.85	0.85	0.85	1.1	1.5
Voltage	50Hz	208-255/360-440	110-120/220-240	208-255/360-440	110-120/220-240	208-255/360-440	110-120/220-240
V	60Hz	220-265/380-460	110-120/220-240	220-265/380-460	110-120/220-240	220-265/380-460	110-120/220-240
Current	50Hz	3.3/1.9	13/6.5	3.3/1.9	13/6.5	4.2/2.4	4.6/2.7
Amp	60Hz	3.6/2.1	14/7	3.6/2.1	14/7	4.5/2.6	5.2/3.0
Vacuum	50Hz	140	140	140	140	165	175
mbar	60Hz	140	140	140	140	180	205
Pressure	50Hz	140	140	140	140	180	200
mbar	60Hz	140	140	140	140	180	230
Air Flow	50Hz	2.4	2.4	2.4	2.4	2.4	2.4
m^3/min	60Hz	2.9	2.9	2.9	2.9	2.9	2.9
Insulation Class		F	F	F	F	F	F
L1		111[4.36]	111[4.36]	143.5[5.65]	143.5[5.65]	111[4.36]	111[4.36]
L2		264[10.40]	264[10.40]	296.5[11.67]	296.5[11.67]	264[10.40]	264[10.40]

RT-3 Series

The high-quality grease used in the shield ball bearing（impeller side）resists high temperature for life time usage.
The high-reliable grease sealed ball bearing（fan side）resists high temperature for motor coil.

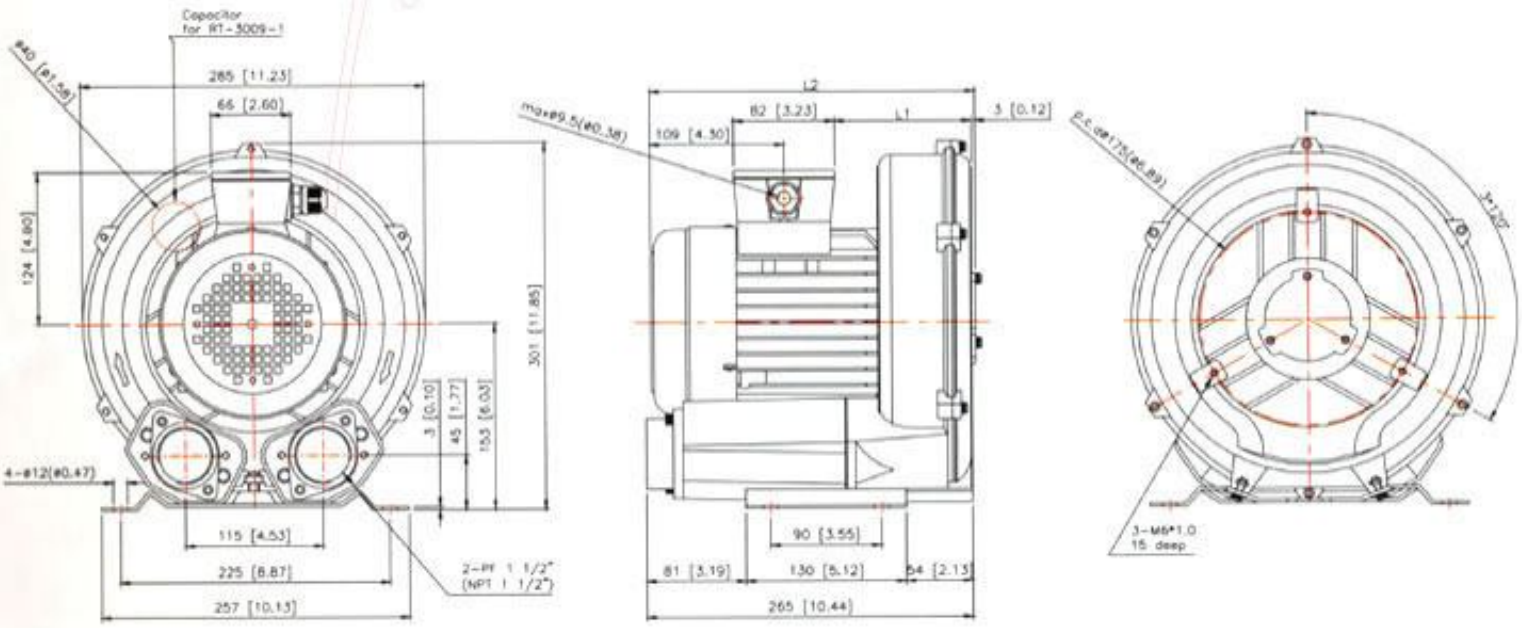

Type Number		RT-4011	RT-4011-1	RT-4015	RT-4015-1	RT-4015L	RT-4015L-1
Phase		3	1	3	1	3	1
Output	50Hz	0.9	0.9	1.3	1.3	1.3	1.3
Kw	60Hz	1.1	1.1	1.5	1.5	1.5	1.5
Voltage	50Hz	208-255/360-440	220-240	208-255/360-440	220-240	208-255/360-440	220-240
V	60Hz	220-265/380-460	220-240	220-265/380-460	220-240	220-265/380-460	220-240
Current	50Hz	4.2/2.4	8.0	5.7/3.3	9.5	5.7/3.3	9.5
Amp	60Hz	4.5/2.6	8.5	6.0/3.5	10	6.0/3.5	10
Vacuum	50Hz	130	130	180	180	180	180
mbar	60Hz	140	140	180	180	180	180
Pressure	50Hz	130	130	180	180	180	180
mbar	60Hz	140	140	180	180	180	180
Air Flow	50Hz	3.6	3.6	3.6	3.6	3.6	3.6
m^3/min	60Hz	4.2	4.2	4.2	4.2	4.2	4.2
Insulation Class		F	F	F	F	F	F
L1		126[4.96]	126[4.96]	126[4.96]	126[4.96]	167.5[6.59]	167.5[6.59]
L2		320[12.61]	320[12.61]	320[12.61]	320[12.61]	361.5[14.23]	361.5[14.23]

RT-4 Series

The high-quality grease used in the shield ball bearing (impeller side) resists high temperature for life time usage.
The high-reliable grease sealed ball bearing (fan side) resists high temperature for motor coil.

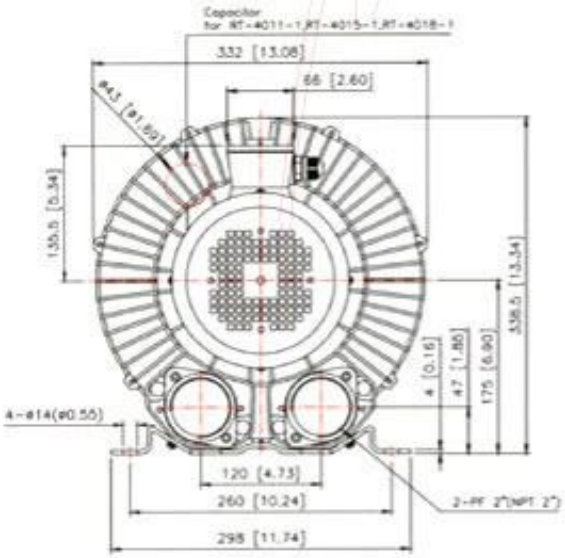

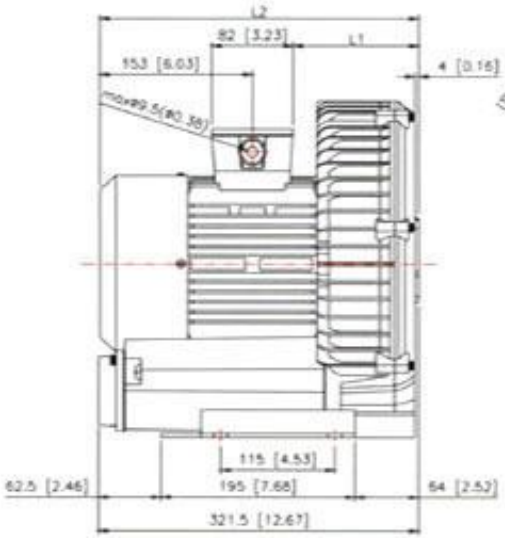

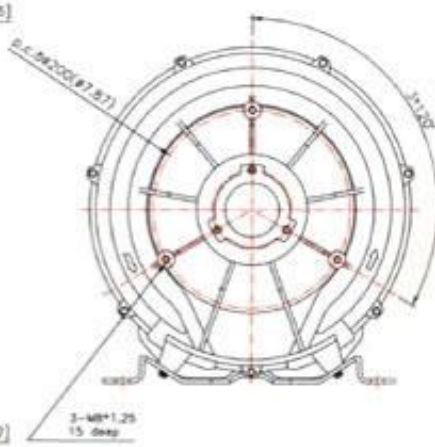

Type Number		RT-4018-1	RT-4019	RT-4019L	RT-4026
Phase		1	3	3	3
Output	50Hz	1.5	1.75	1.75	2.2
Kw	60Hz	1.75	1.9	1.9	2.6
Voltage	50Hz	220-240	208-255/360-440	208-255/360-440	208-255/360-440
V	60Hz	220-240	220-265/380-460	220-265/380-460	220-265/380-460
Current	50Hz	12.3	6.7/3.9	6.7/3.9	7.8/4.5
Amp	60Hz	13	7/4	7/4	9.5/5.5
Vacuum	50Hz	210	210	210	220
mbar	60Hz	210	210	210	255
Pressure	50Hz	220	220	220	270
mbar	60Hz	220	220	220	300
Air Flow	50Hz	3.6	3.6	3.6	3.6
m^3/min	60Hz	4.2	4.2	4.2	4.2
Insulation Class		F	F	F	H
L1		126[4.96]	126[4.96]	167.5[6.59]	126[4.96]
L2		320[12.61]	320[12.61]	361.5[14.23]	320[12.61]

RT-4 Series

The high-quality grease used in the shield ball bearing（impeller side）resists high temperature for life time usage.
The high-reliable grease sealed ball bearing（fan side）resists high temperature for motor coil.

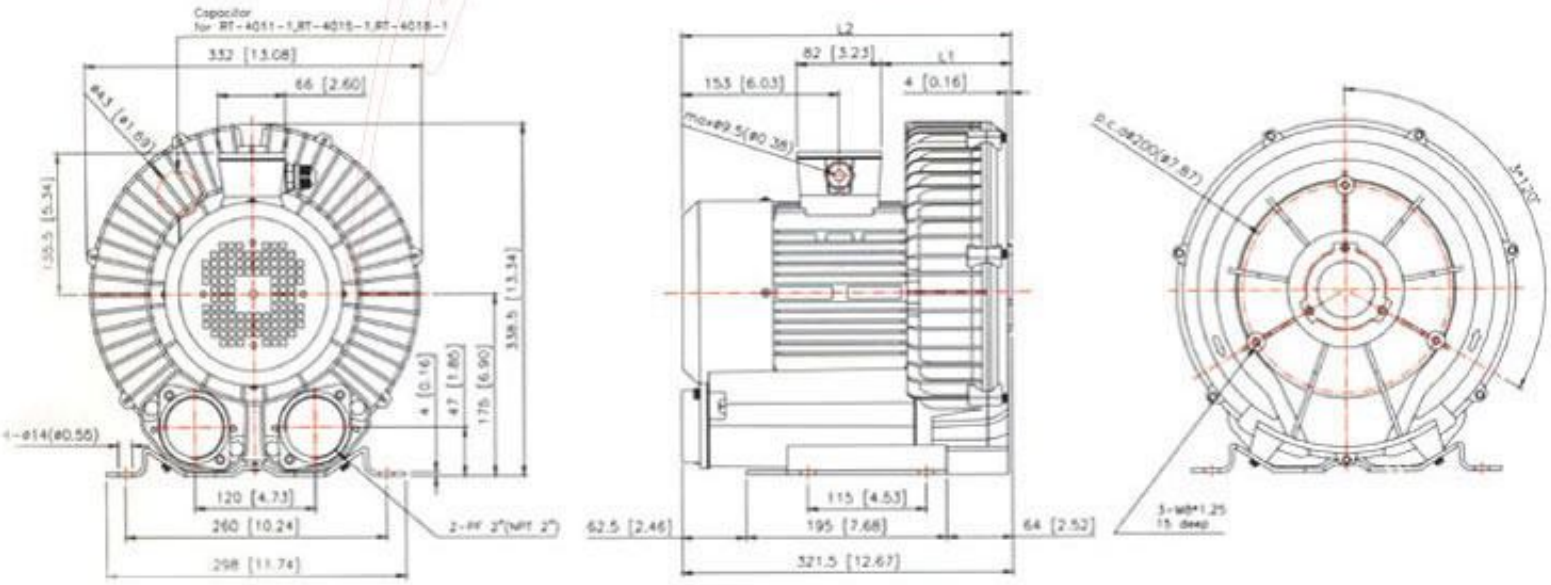

Type Number		RT-5026	RT-5026-2	RT-5026L
Phase		3	1	3
Output Kw	50Hz	2.2	2.2	2.2
	60Hz	2.6	2.6	2.6
Voltage V	50Hz	208-255/360-440	220-240	208-255/360-440
	60Hz	220-265/380-460	220-240	220-265/380-460
Current Amp	50Hz	9.7/5.6	16.7	9.7/5.6
	60Hz	10.7/6.2	16.7	10.7/6.2
Vacuum mbar	50Hz	230	230	230
	60Hz	220	220	220
Pressure mbar	50Hz	230	230	230
	60Hz	220	220	220
Air Flow m^3/min	50Hz	5.2	5.2	5.2
	60Hz	6.2	6.2	6.2
Insulation Class		H	H	H
L1		143.5[5.65]	143.5[5.65]	186.5[7.34]
L2		370[14.58]	370[14.58]	413[16.26]

RT-5 Series

The high-quality grease used in the shield ball bearing (impeller side) resists high temperature for life time usage.
The high-reliable grease sealed ball bearing (fan side) resists high temperature for motor coil.

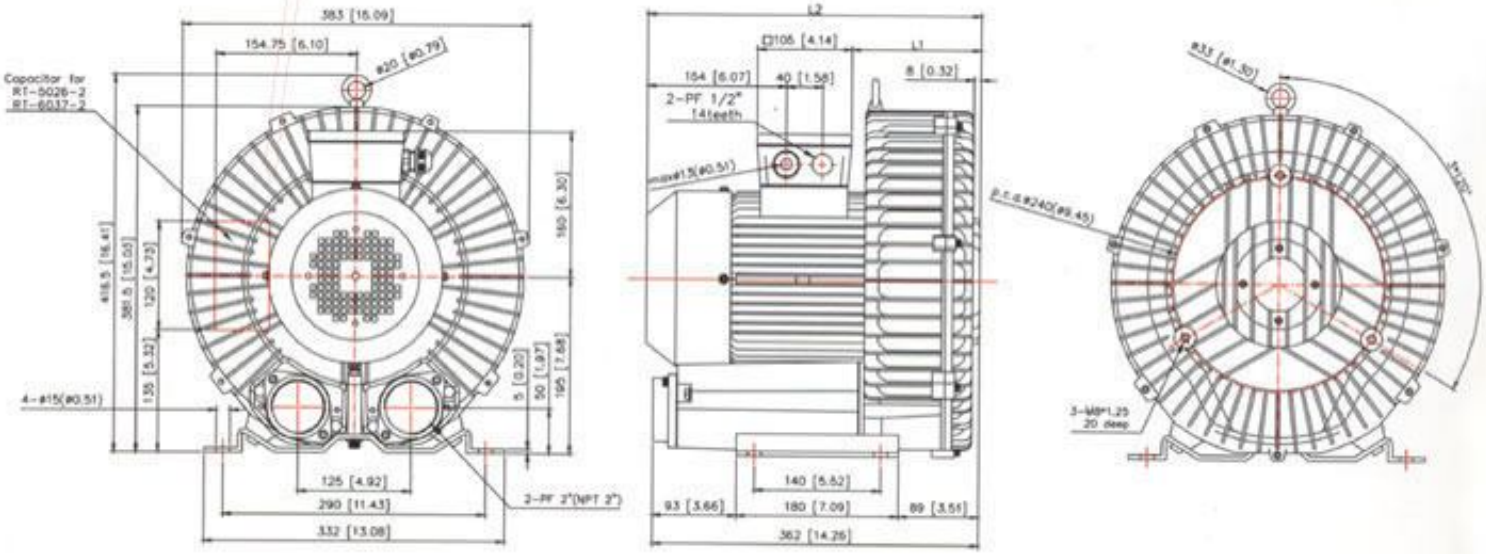

Type Number		RT-6037	RT-6037-2	RT-6037L	RT-6046
Phase		3	1	3	3
Output	50Hz	3.4	3.4	3.4	4.0
Kw	60Hz	3.7	3.7	3.7	4.6
Voltage	50Hz	208-255/360-440	220-240	208-255/360-440	208-255/360-440
V	60Hz	220-265/380-460	220-240	220-265/380-460	220-265/380-460
Current	50Hz	12.5/7.2	28	12.5/7.2	14.3/8.2
Amp	60Hz	13.5/7.8	28	13.5/7.8	16.2/9.3
Vacuum	50Hz	110	110	110	110
mbar	60Hz	140	140	140	140
Pressure	50Hz	130	130	130	130
mbar	60Hz	170	170	170	170
Air Flow	50Hz	5.2	5.2	5.2	5.2
m^3/min	60Hz	6.2	6.2	6.2	6.2
Insulation Class		H	H	H	H
L1		143.5[5.65]	143.5[5.65]	186.5[7.34]	143.5[5.65]
L2		370[14.58]	370[14.58]	413[16.26]	370[14.58]

RT-6 Series

The high-quality grease used in the shield ball bearing（impeller side）resists high temperature for life time usage.
The high-reliable grease sealed ball bearing（fan side）resists high temperature for motor coil.

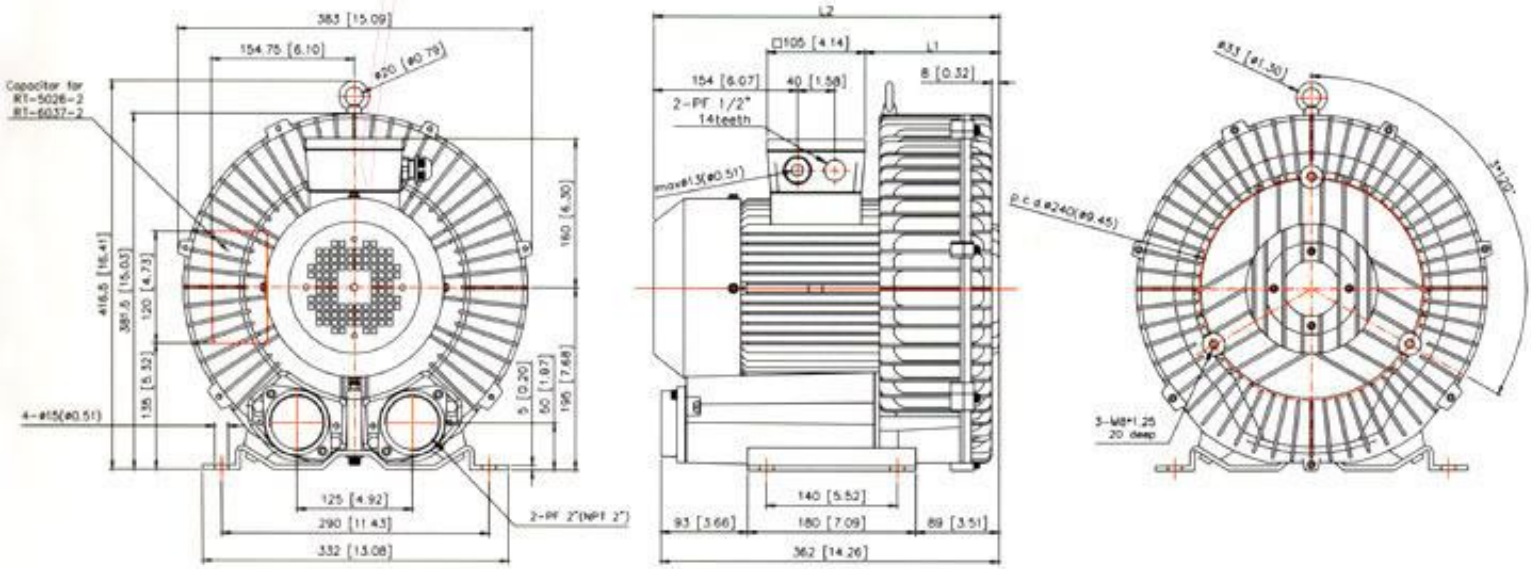

Type Number		RT-7063	RT-8086
Phase		3	3
Output	50Hz	5.5	7.5
Kw	60Hz	6.3	8.6
Voltage	50Hz	220-240/380-415	220-240/380-415
V	60Hz	220-240/380-415	220-240/380-415
Current	50Hz	21/12	27/15.6
Amp	60Hz	26.5/15.3	34/19.6
Vacuum	50Hz	270	300
mbar	60Hz	290	350
Pressure	50Hz	300	400
mbar	60Hz	290	400
Air Flow	50Hz	9.2	9.2
m^3/min	60Hz	10.9	10.9
Insulation Class		H	H

RT-7 & 8 Series

The high-quality grease used in the shield ball bearing (impeller side) resists high temperature for life time usage.
The high-reliable grease sealed ball bearing (fan side) resists high temperature for motor coil.

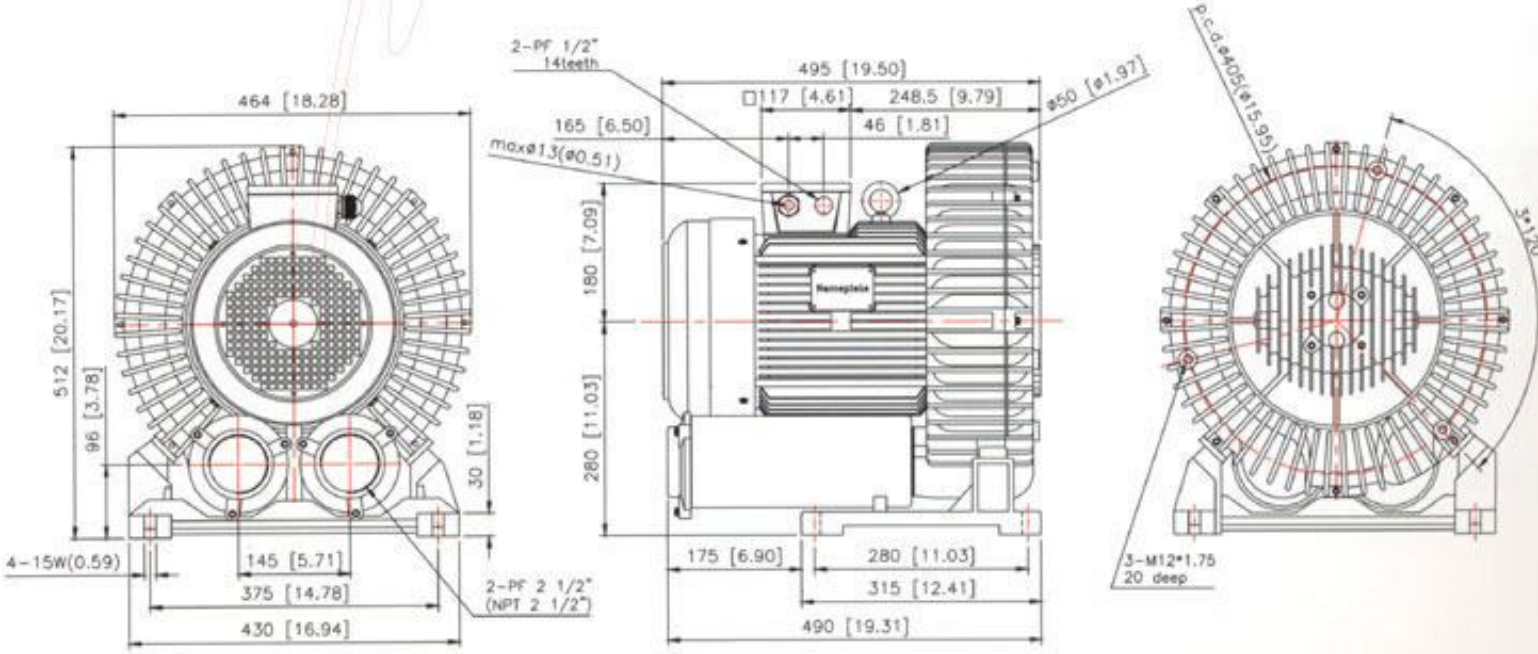

Ultra Air Power from RON TAI Taiwan

Type Number		RT-9110	RT-9150	RT-9220
Phase		3	3	3
Output	50Hz	9	13	20
Kw	60Hz	11	15	22
Voltage	50Hz	220-240/380-415	220-240/380-415	220-240/380-415
V	60Hz	220-240/380-415	220-240/380-415	220-240/380-415
Current	50Hz	36/20.8	46.8/27	66.7/38.6
Amp	60Hz	37/21.4	51.5/30	76/44
Vacuum	50Hz	200	300	350
mbar	60Hz	190	290	370
Pressure	50Hz	200	300	450
mbar	60Hz	190	290	430
Air Flow	50Hz	18.9	18.9	18.9
m^3/min	60Hz	22.4	22.4	22.4
Insulation Class		H	H	H

RT-9 Series

The high-quality grease used in the shield ball bearing (impeller side) resists high temperature for life time usage.
The high-reliable grease sealed ball bearing (fan side) resists high temperature for motor coil.

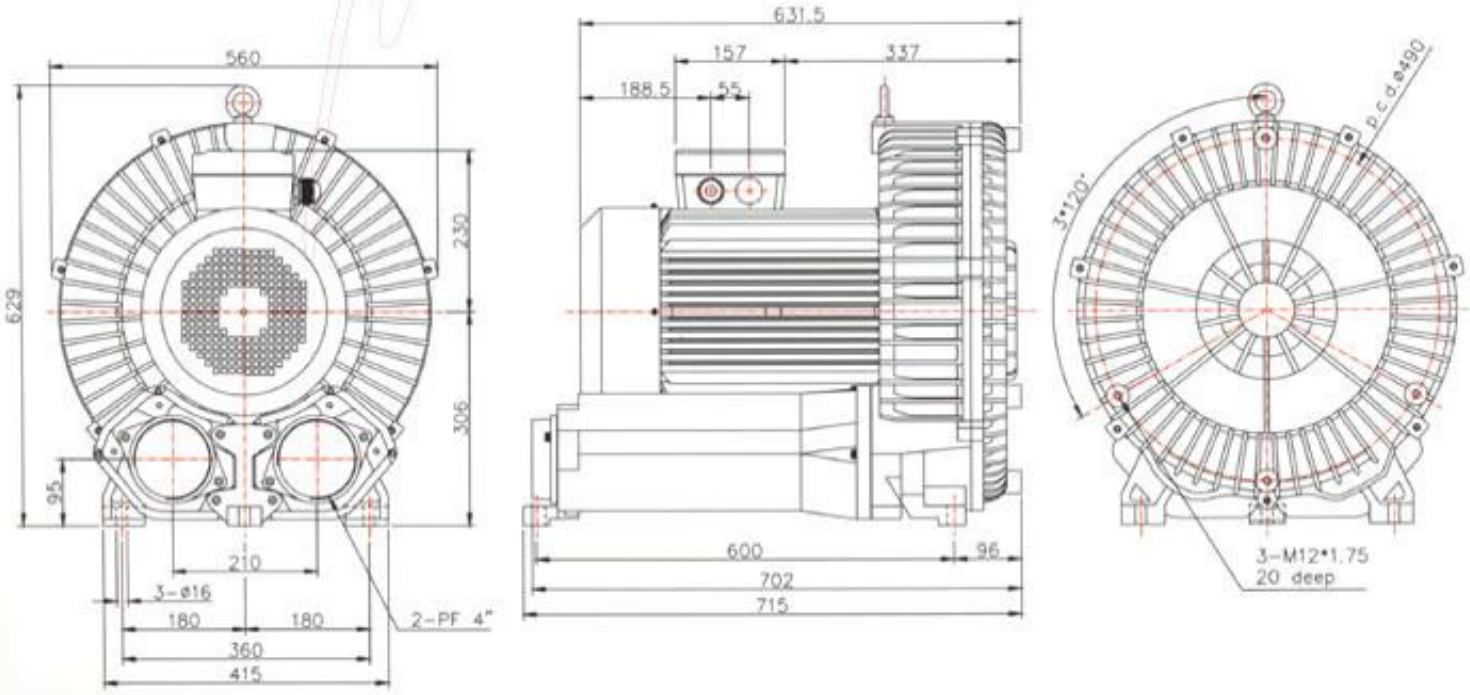

Inlet /Outlet

-for Hose Pipe

Type No.	D mm	d mm	H mm	L mm	P mm	Weight kgs	Material	Diagram
1-OD-32	32	5.5	29	35	50	0.05	Cast Aluminum	1
2-OD-32	32	6	31	38	64	0.08	Cast Aluminum	1
2-OD-37	37	6	31	38	64	0.07	Cast Aluminum	1
3-OD-44	44	6	37	44	67	0.08	Cast Aluminum	1
3-OD-51	51	6	31	38	67	0.09	Cast Aluminum	1
4-OD-50	50	7	44	52	82	82	Cast Aluminum	1
4-OD-57	57	7	58	65	82	82	Cast Aluminum	1
3-OD-44-2	44	7	28	57	67	82	Cast Aluminum	2
3-OD-55-2	55	7	52	105	67	82	Cast Aluminum	2

Diagram 1

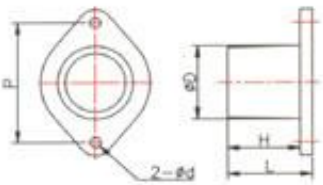

Diagram 2

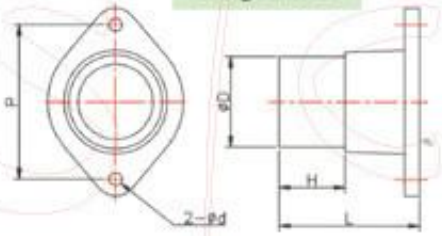

-for Thread Pipe

Type No.	Thread PF (or USA PF)	d mm	H mm	L mm	P mm	Weight kgs	Material	Diagram
1-T10	1"	5.5	18	23	50	0.05	Cast Aluminum	3
2-T12	1 1/4"	6	22	29	64	0.07	Cast Aluminum	3
3-T15	1 1/2"	6	24	31	67	0.08	Cast Aluminum	3
5-T20	2"	7	18	25	82	0.10	Cast Aluminum	3
7-T25	2 1/2"	7	16	31	130	0.80	Cast Iron	4
9-T40	4"	9	29	36	150	1.10	Cast Iron	3

Diagram 3

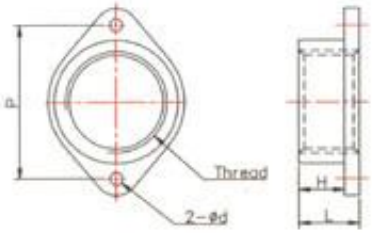

Diagram 4

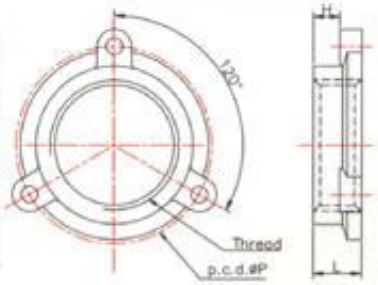

— Bend for Filter

Dimensions

Type No.	Thread inch	L mm	M mm	N mm	W mm	Weight kgs	Material
BC-10	PT-1"	52	52	73	38	0.36	Cast Iron
BC-12	PT-1 1/4"	56	65	90	47	0.57	Cast Iron
BC-15	PT-1 1/2"	60	73	97	54	0.87	Cast Iron
BA-15	PT-1 1/2"	100	110	115	—	0.90	Cast Aluminum
BA-20	PT-2"	82	132	139	—	1.30	Cast Aluminum
BC-20	PT-2"	67	85	120	65	1.30	Cast Iron
BP-20	PT-2"	75	4	110	67	0.28	Plastic
BC-25	PT-2 1/2"	76	105	137	82	1.86	Cast Iron
BC-40	PT-4"	96	165	233	121	5.40	Cast Iron

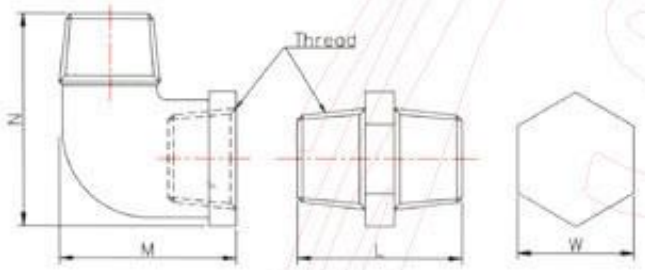

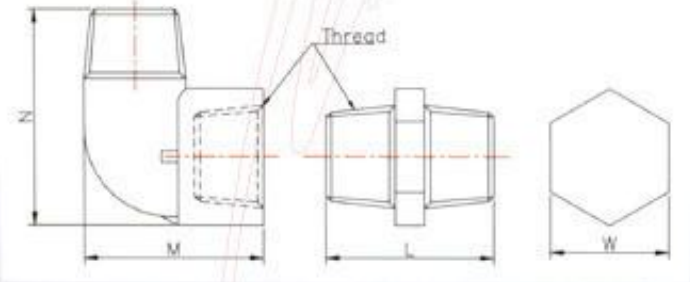

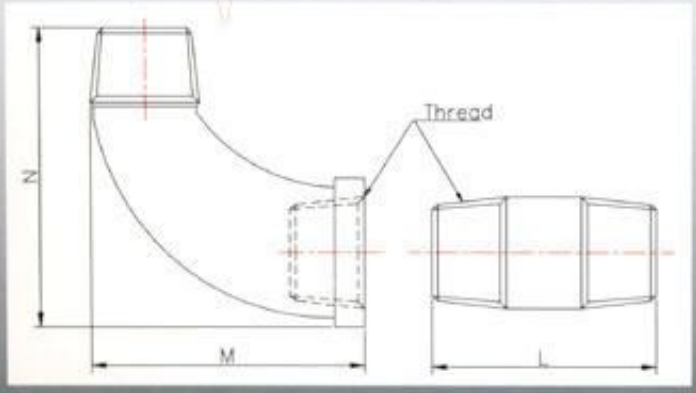

—Inlet Filter

If inlet does not connect any pipe,a filter with large area shall be installed at suction inlet.

Dimensions

Type No.	Screw PT	A mm	D mm	L mm	M mm	Filtration mesh	Flow l/min	Weight kgs
MF-08	1"	42	58	170	155	100	110	0.20
MF-10	1 1/4"	54	71	186	170	100	210	0.35
MF-12	1 1/2"	65	85	196	182	100	285	0.49
MF-16	2"	75	103	215	202	100	395	0.65
MF-20	2 1/2"	97	148	274	252	100	750	1.20
MF-32	4"	142	208	380	357	100	1000	2.45

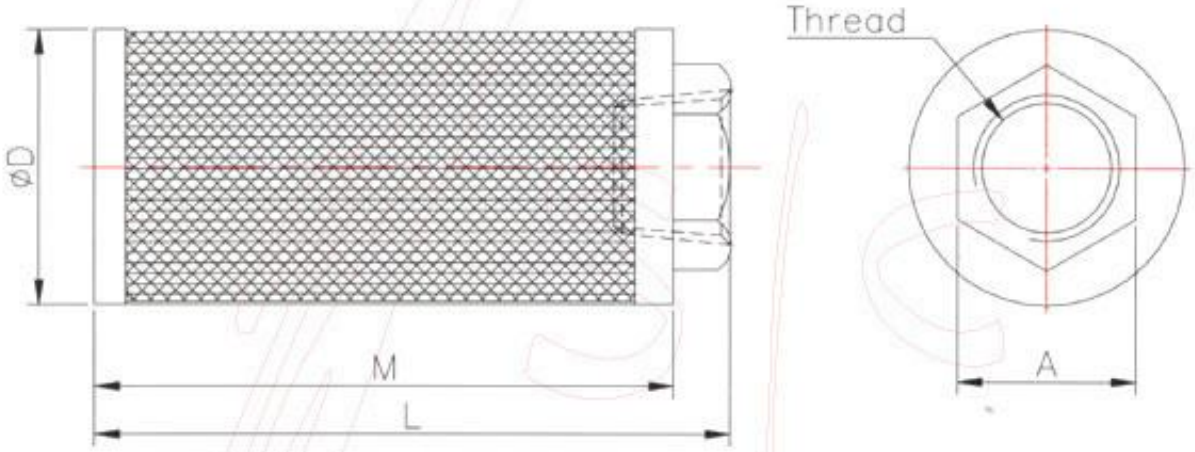

FILTER

Tee —for Relief Valve

Suitable for—

RT-10·· 20·· 30·· 23··· 33···

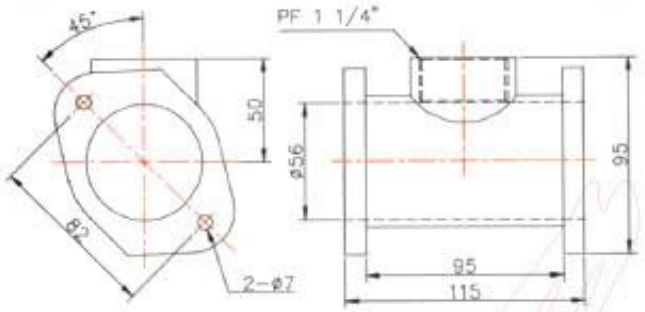

Suitable for—

RT-40·· 50·· 60·· 43··· 63··· 64···

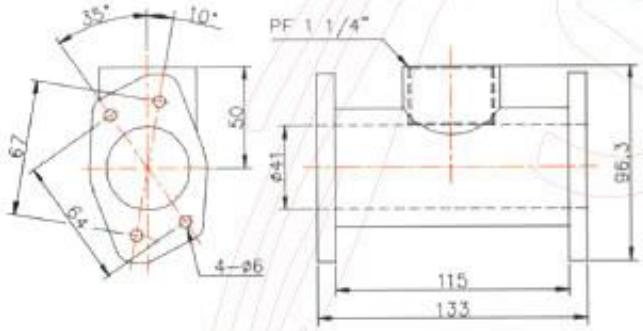

Connected System

Adjustable pressure & vacuum relief valve

Relief Valve（pvc）

Type Number	Screw	Range
RV-03	PF-1 1/4 "	0 ~ 300mbar
RV-36	PF-1 1/4 "	300 ~ 600mbar

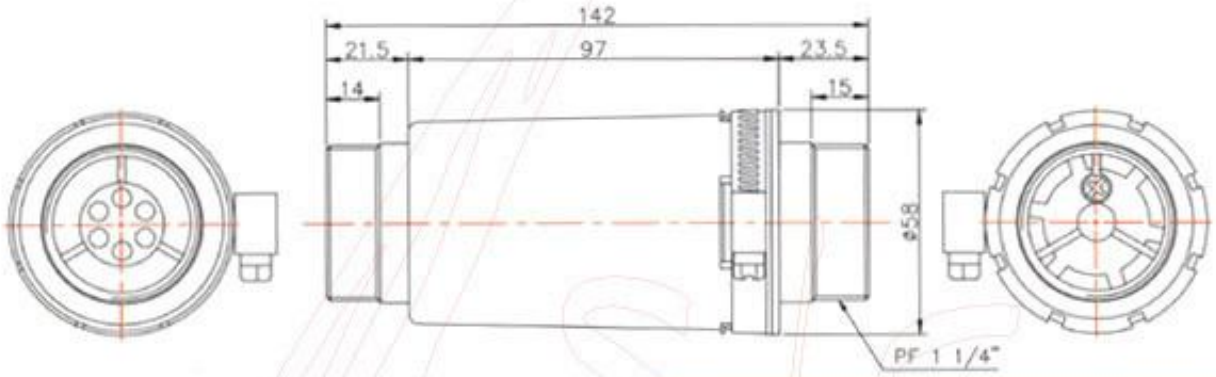

—Relief Valve

Over high pressure using shall be avoid in closed pip loop for side channel compressor/vacuum pump, otherw deformation and break may be occur to side chan compressor/vacuum due to temperature raise or over lo adjustable pressure & vacuum relief valve shall be instal to protect motor.

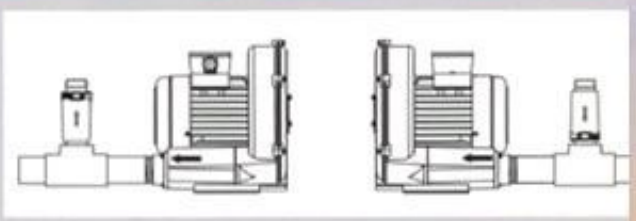

Application：

- Used in side channel blower (ring blower) and suitable both pressure/vacuum use.
- Static pressure setting easily adjustable.
- Connect thread suitable for PT - Pf and NPT-1 1/4".
- Durable operation temperature：-10 ~+120℃
- Keep away from grease or volatile oil/gas.

2 in 1 Style

Adjustable pressure & vacuum relief valve

Relief Valve（Aluminium）

Type Number	Screw	Range
RV-A03	PF-1 1/4 "	0 ~ 300mbar
RV-A36	PF-1 1/4 "	300 ~ 600mbar

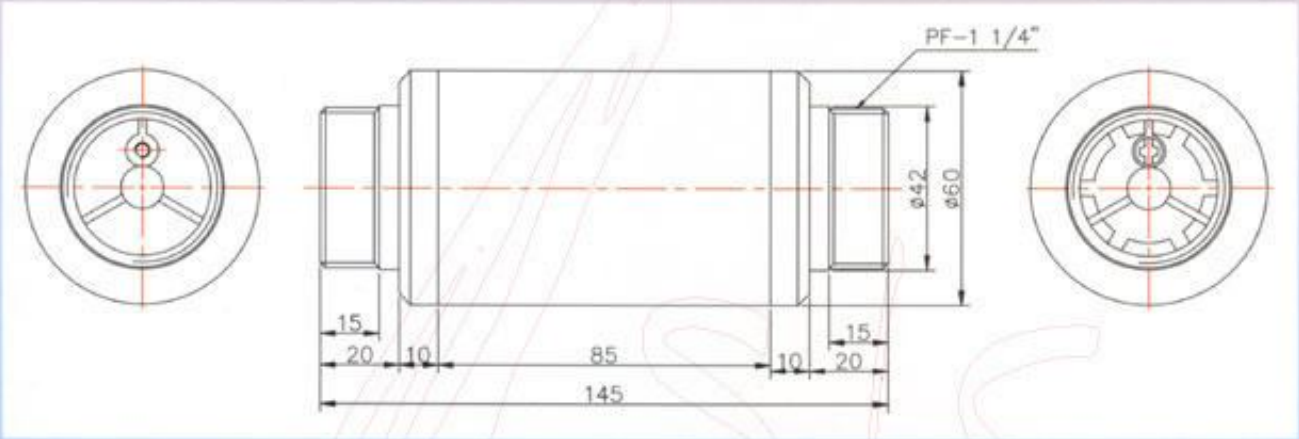

—Relief Valve

Over high pressure using shall be avoid in closed piping loop for side channel compressor/vacuum pump, otherwise deformation and break may be occur to side channel compressor/vacuum due to temperature raise or over load, adjustable pressure & vacuum relief valve shall be installed to protect motor.

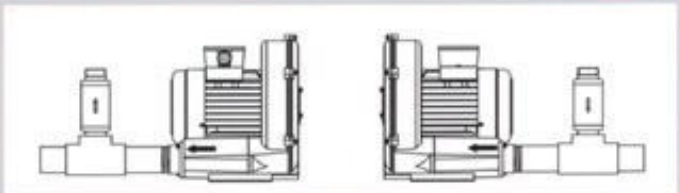

2 in 1 Style

Application：

- Used in side channel blower (ring blower) and suitable both pressure/vacuum use.
- Static pressure setting easily adjustable.
- Connect thread suitable for PT、Pf and NPT-1 1/4".
- Durable operation temperature：-20 ~+140℃
- Keep away from grease or volatile oil/gas.

LDL ®

RON TAI ELECTRICAL ENGINEERING CO., LTD

RING BLOWER

PROFESSIONAL

2004.10.10

You authorized Ron Tai distributor